Fieldbus System (GW System, 4 Branches)

EX510 Series

Compatible Protocols

CC-Link DeviceNet PROFIBUS

Made to Order

EtherNet/IP PROFINET

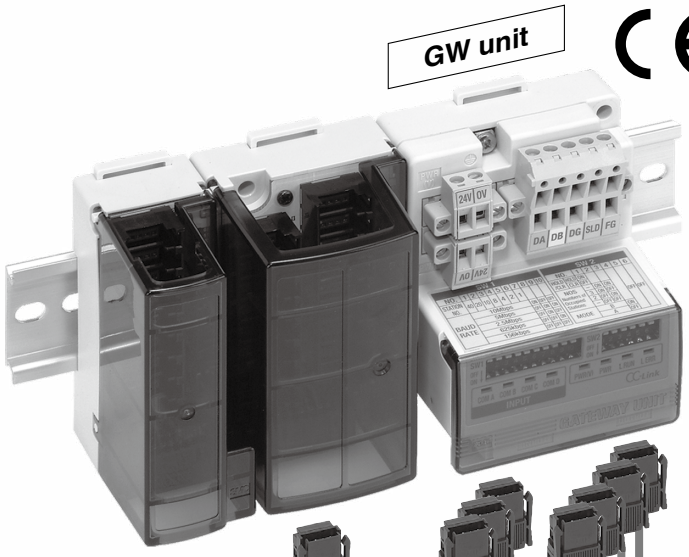

CE c UL us

* Only the SJ valve is UL-compliant.

RoHS

* Input units with covers

e-CON connectors

16-point input unit (Interlinks 16 connectors)

* The product is shown without a cover.

e-CON connectors

16-point input unit (Interlinks 8 connectors)

* The product is shown without a cover.

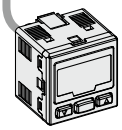

Pressure switch

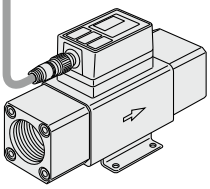

Flow switch

Input device

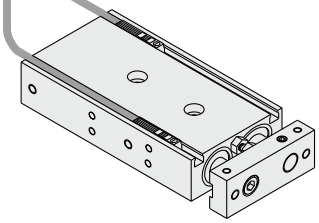

Auto switch

Two 2-wire auto switches can be connected to a single connector.

e-CON connectors

Manifold valve with SI unit

VQZ1000/2000/3000

S0700

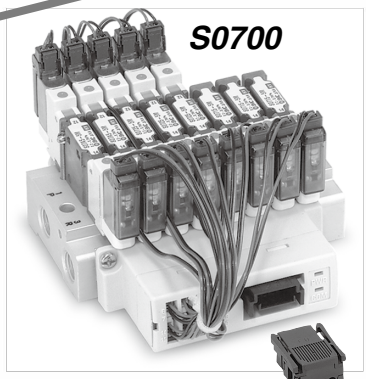

SY3000/5000/7000/9000

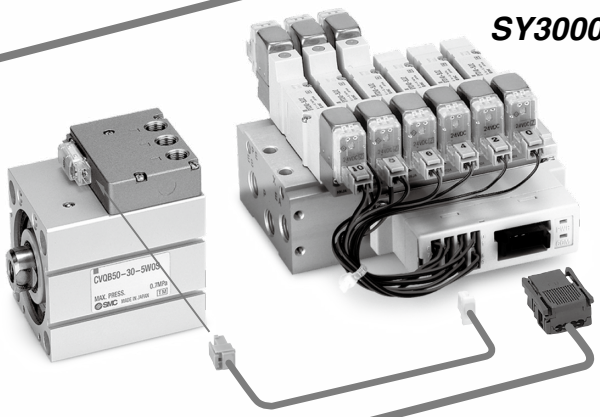

Output unit

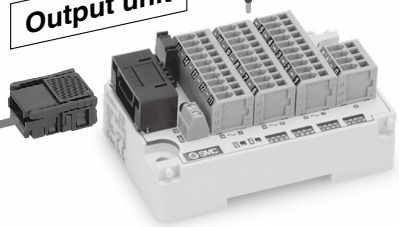

Manifold Solenoid Valves

SY3000/5000 (Plug-in)

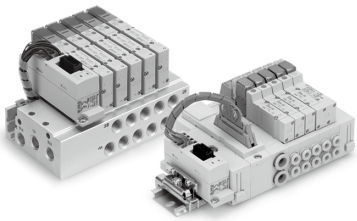

S0700 (Plug-in)

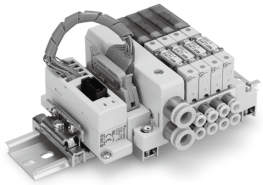

VQZ1000/2000/3000

SYJ3000/5000/7000

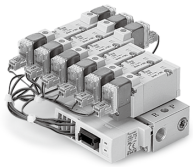

SJ2000/3000

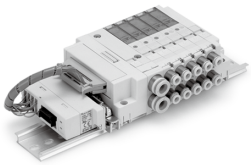

SZ3000

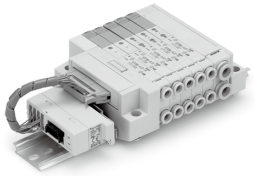

SQ1000/2000

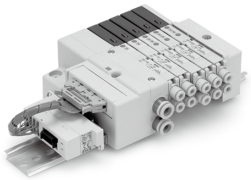

VQ1000/2000

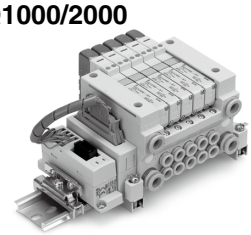

Output equipment

Valves, indicator lights, relays, buzzers, etc., can be connected.

2-port solenoid valve

Features of the EX510 Series

Current system

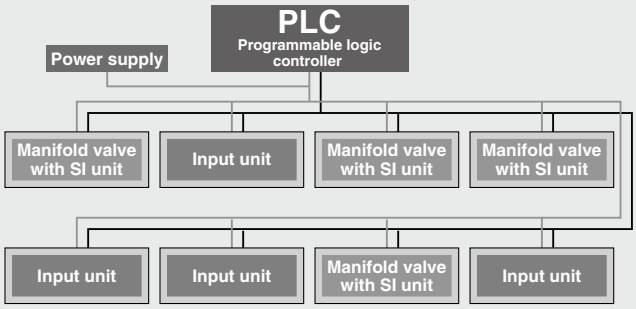

System adopting the EX510 series

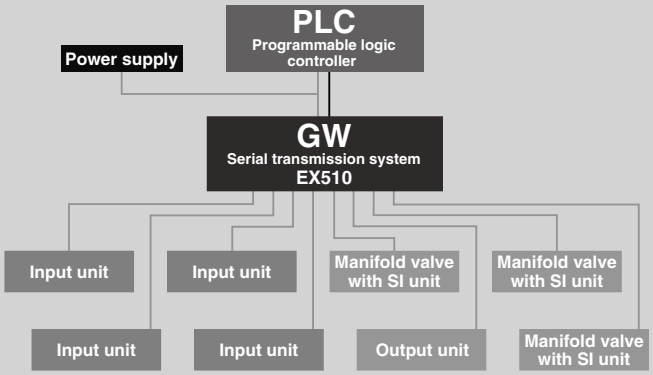

Feature 1 More valves and sensors can be connected.

- By adopting the **EX510** series, it is possible to connect more valves and sensors.

Compatible protocol	Current SI unit model
CC-Link	3 master stations 3 manifolds
DeviceNet™	1 node 1 manifold
PROFIBUS DP	1 node 1 manifold

Compatible protocol	EX510 series
CC-Link	**3 master stations 4 manifolds/4 input units**
DeviceNet™	**1 node 4 manifolds/4 input units**
PROFIBUS DP	**1 node 4 manifolds/4 input units**

Feature 2 Connector cables (including the power supply cable) allow for reduced wiring.

- A power supply cable for each slave unit was required in the past.

- **For the EX510 series, only a power supply cable to the GW unit is required. Connected to each unit is a branch cable which combines the cables for communication and power supply.**

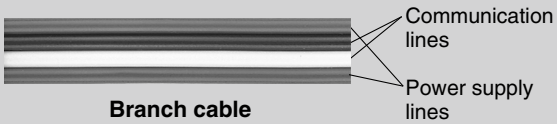

Branch cable

Feature 3 There is no need to set the address for the SI units, output units, or input units.

- Setting the address for each unit was required in the past.

- **It is okay to set the address for the GW unit only.**

Feature 4 Compact SI unit

- The SI unit which connects output devices, such as solenoid valves, has a compact design compared with the current model. (Compactness: volume ratio reduced by 60% or more)

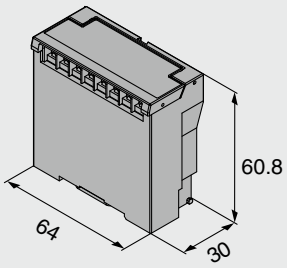

Current model (EX120 series)

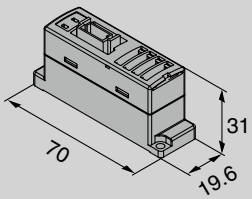

EX510 series

Feature 5 Allows for the easy change of Fieldbusses

- In the past, all the part numbers of slave units needed to be changed by returning them to the manufacturer and reordering (re-estimate, redelivery) them.

- **For the EX510 series, only the GW unit needs to be changed.**

Feature 6 Adopts connectors which do not require any special tools for installation

No special tools are required for press-fitting the connectors for branch cable connections or for the e-con connectors for sensor connections.

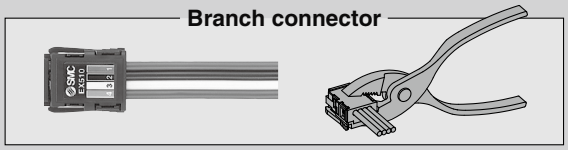

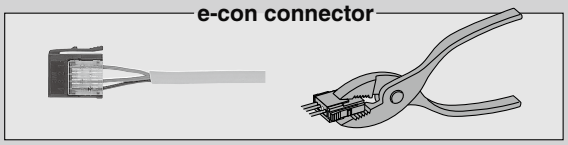

No need to strip the wires **Only pliers are required for clamping.**

The output unit adopts a spring type terminal box, eliminating the need to tighten any retaining screws.

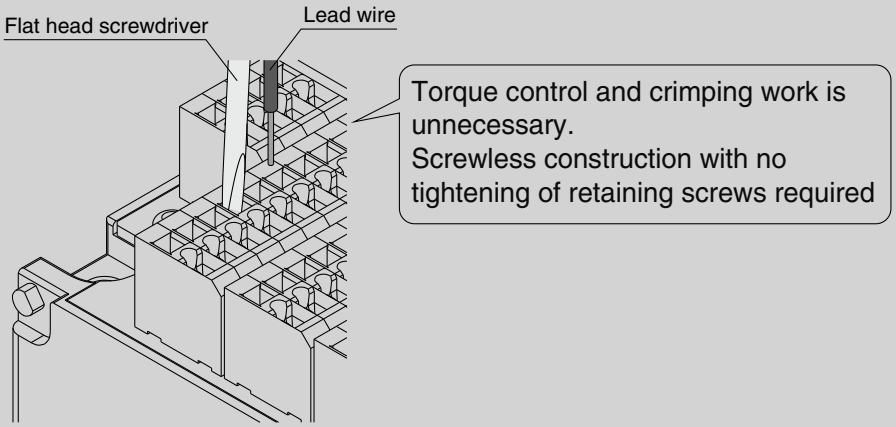

Feature 7 Cable lengths of up to 20 meters are available.

Various units can be connected within a radius of 20 meters around the GW unit.

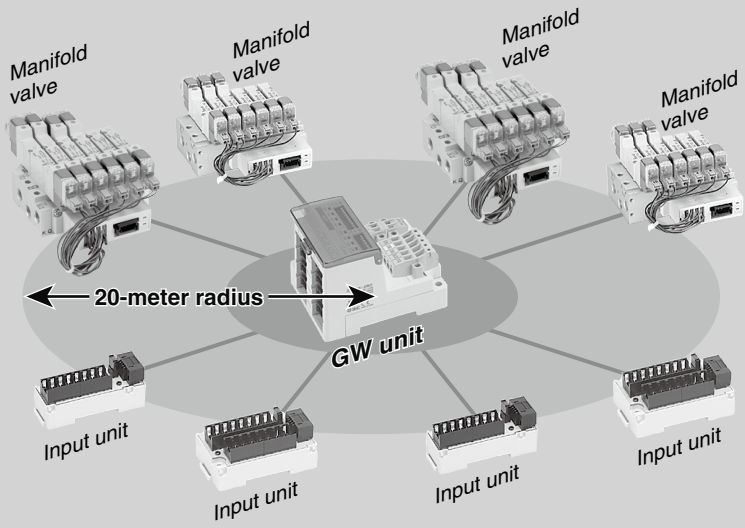

Feature 8 Delay in transmission of 1 ms or less

The delay in transmission between the GW unit and SI units/output units/input units is 1 ms or less.

Feature 9 Increased I/O flexibility

The occupying number of points in the GW unit can be configured flexibly by setting a switch.

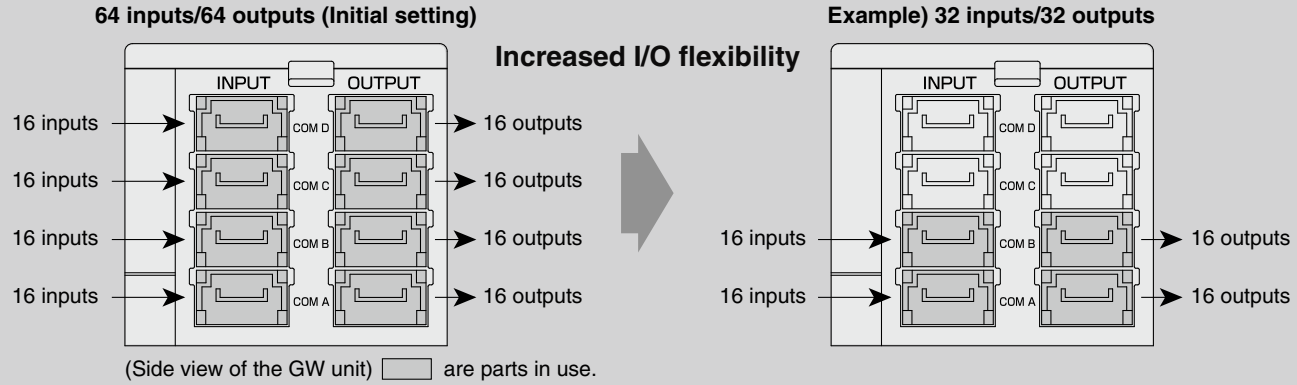

∗ Setting is different depending on the respective protocol. Refer to the specifications for details.

Feature 10 Effective use made of the unused points of the SI unit

Valves which are independent from the manifold can be converted to serial transmission without purchasing new SI units.

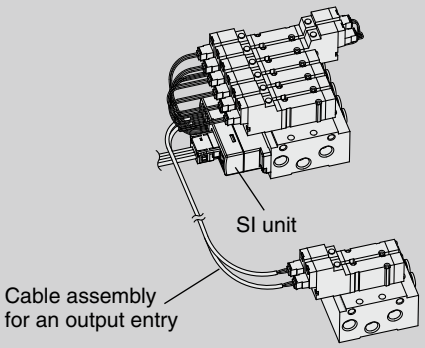

Feature 11 Protection

Each unit is protected against short-circuits from power supply loads.

Input/output unit fuses are replaceable.

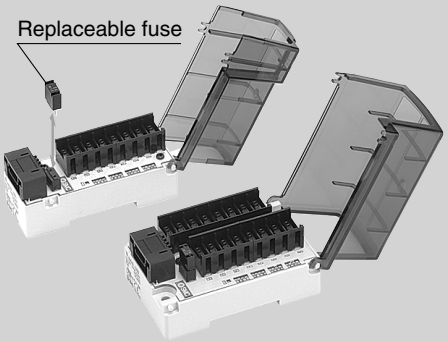

The short-circuit protection is integrated into the SI unit.

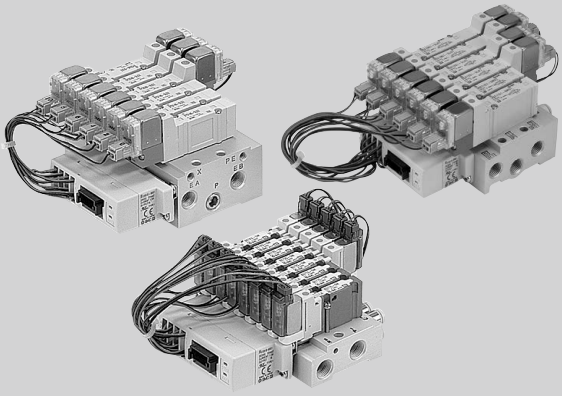

CONTENTS

Type 2 Gateway type

Fieldbus System (GW System, 4 Branches)
EX510 Series

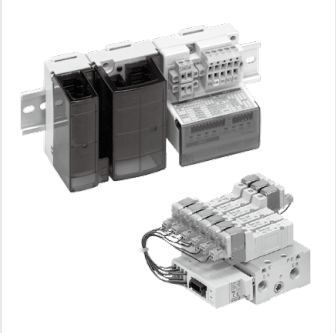

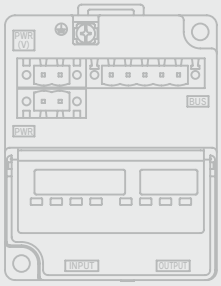

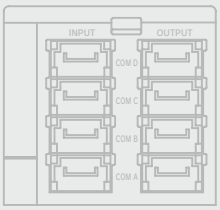

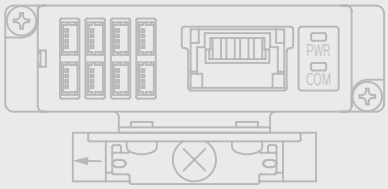

Composition ····· p. 195

GW Unit
- How to Order ····· p. 196
- Specifications ····· p. 196
- Dimensions ····· p. 196
- Parts Description ····· p. 197
- LED Indicator ····· p. 198
- Internal Circuit ····· p. 199
- Flexible I/O Setting Examples ····· p. 200

SI Unit
- How to Order ····· p. 201
- Specifications ····· p. 201
- Dimensions ····· p. 201
- Parts Description/LED Indicator ····· p. 202
- Internal Circuits and Wiring Examples ····· p. 203

Input Unit
- How to Order ····· p. 204
- Specifications ····· p. 204
- Dimensions ····· p. 204
- Parts Description/LED Indicator ····· p. 205
- Internal Circuits and Wiring Examples ····· p. 206

Output Unit
- How to Order ····· p. 208
- Specifications ····· p. 208
- Dimensions ····· p. 208
- Parts Description/LED Indicator ····· p. 209
- Internal Circuits and Wiring Examples ····· p. 209
- Connection to Output Equipment ····· p. 211
- Direct Operated 2-Port Solenoid Valve ····· p. 211

Accessories
- ❶ Branch Cable ····· p. 212
- ❷ Branch Connector (Unit 1 pc.) ····· p. 212
- ❸ Cable Assembly for Outputting ····· p. 212
- ❹ e-con Connector ····· p. 212
- ❺ Replacement Fuse ····· p. 213

Ordering Examples ····· p. 213

Made to Order
- ① EtherNet/IP™ compatible ····· p. 214
- ② PROFINET compatible ····· p. 214

Specific Product Precautions ····· p. 215

Fieldbus System
GW System, 4 Branches
EX510 Series

* Only the SJ valve is UL-compliant.

RoHS

Composition

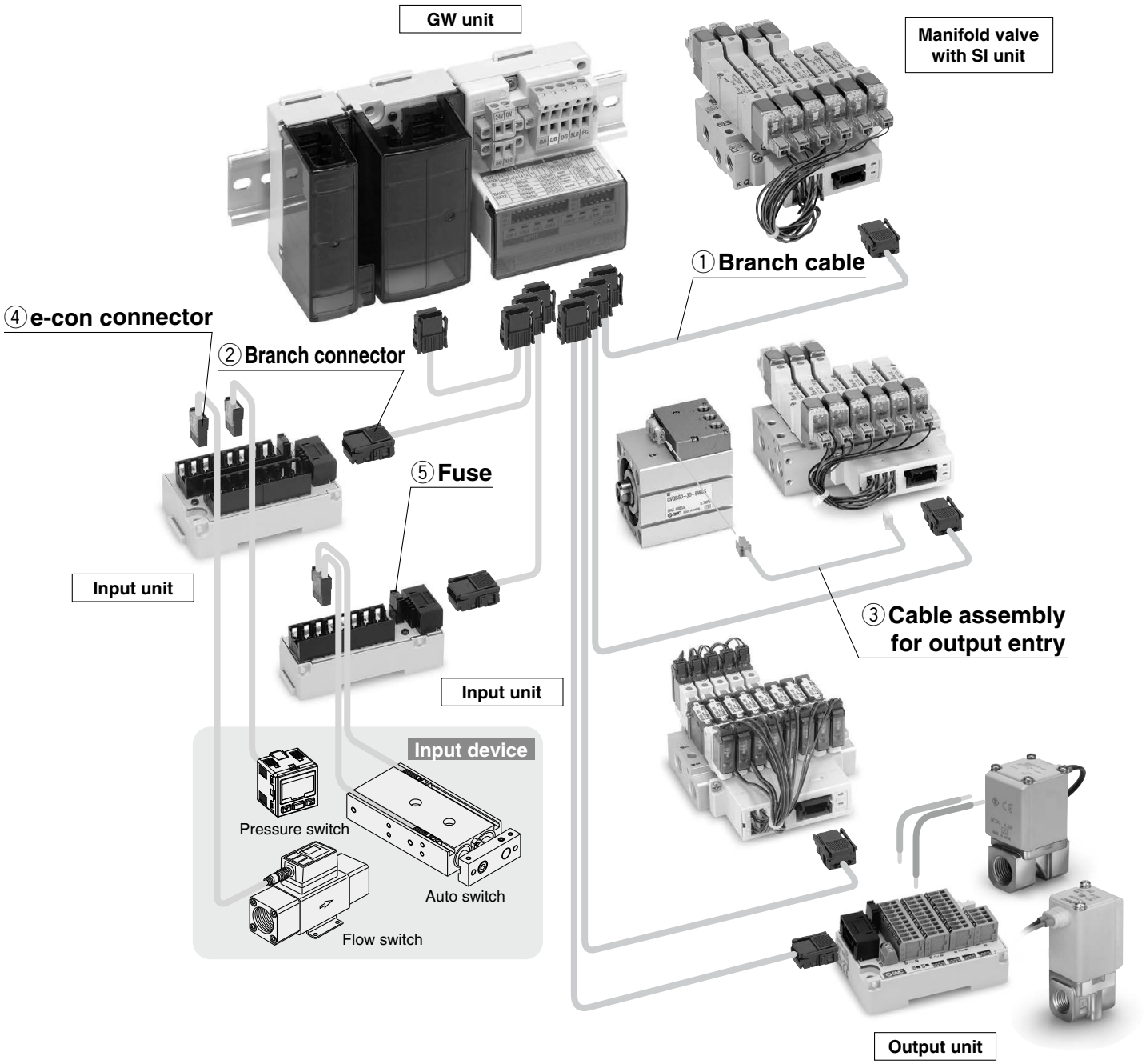

GW Unit

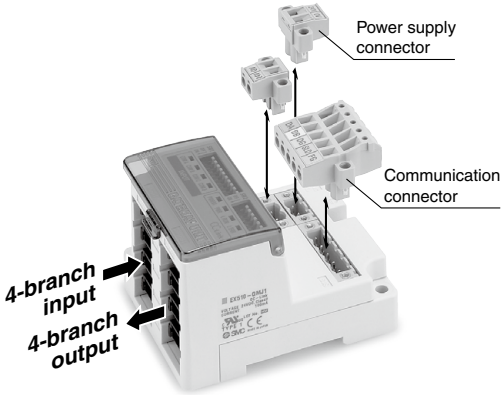

How to Order

EX510-G MJ1 - ☐

Protocol

MJ1	CC-Link
DN1	DeviceNet™
PR1	PROFIBUS DP

Made to Order (Refer to page 214.)

EtherNet/IP™ compatible, 64 outputs (16 inputs 4-branch)
PROFINET compatible, 64 outputs (16 inputs 4-branch)

Specifications

Model			EX510-GMJ1	EX510-GDN1	EX510-GPR1
Communication	Applicable system	Protocol	CC-Link	DeviceNet™	PROFIBUS DP
		Version*1	Ver. 1.10	Release 2.0	DP-V0
	Communication speed		156 k/625 k/ 2.5 M/5 M/10 Mbps	125 k/250 k/ 500 kbps	9.6 k/19.2 k/45.45 k/ 93.75 k/187.5 k/500 k/ 1.5 M/3 M/6 M/12 Mbps
	Configuration file*2		CSP+ file	EDS file	GSD file
	I/O occupation area (Inputs/Outputs)		96/96 (3 stations, remote device station) * Possible to change depending on the switch setting	64/64 * Possible to change depending on the switch setting	
	Terminating resistor		Not provided		Provided
Power supply voltage	For unit		24 VDC ±10%	11 to 25 VDC (Supplied by DeviceNet™ circuit, 50 mA or less)	24 VDC ±10%
	For sensors			24 VDC ±10%	
	For valve		24 VDC ±10%/–5%		
Internal current consumption			100 mA or less (single GW unit)		
Input	Number of inputs		64 inputs (16 inputs x 4 branches) * Possible to change depending on the switch setting		
	Connection input device		The EX510 series input unit (connection from communication port A to D)		
	Supply voltage		24 VDC		
	Supply current		Max. 4 A (Max. 1 A per branch)		
Output	Number of outputs		64 outputs (16 outputs x 4 branches) * Possible to change depending on the switch setting		
	Connection output device		The EX510 series SI unit manifold and output unit (connection from communication port A to D)		
	Supply voltage		24 VDC		
	Supply current		Max. 6 A (Max. 1.5 A per branch)		
Branch cable length			20 m or less		
Environmental resistance	Enclosure		IP20		
	Operating temperature range		–10 to 50°C		
	Operating humidity range		35 to 85%RH (No condensation)		
	Withstand voltage		500 VAC for 1 minute between whole external terminal and FG		
	Insulation resistance		10 MΩ or more (500 VDC) between whole external terminal and FG		
Standards			CE marking, UL (CSA)		
Weight			160 g (including accessories)		
Accessory			Communication connector 1 pc., Power supply connector 2 pcs.		Communication connector 1 pc., Power supply connector 2 pcs., Terminating resistor 1 pc.

*1 Please note that the version is subject to change.
*2 The setting file can be downloaded from SMC website, http://www.smcworld.com
* For detailed specifications other than the above, refer to the operation manual that can be downloaded from SMC website, http://www.smcworld.com

Dimensions

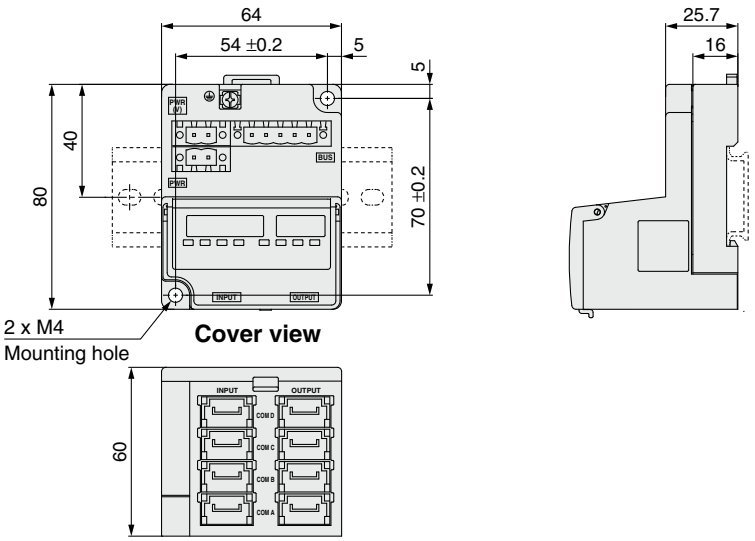

Parts Description

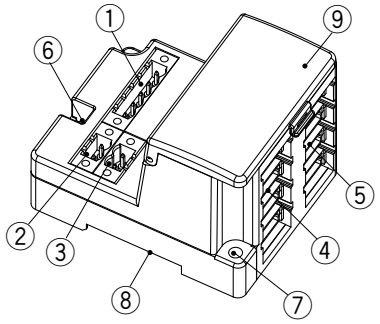

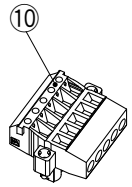

Communication connector (1 pc.)

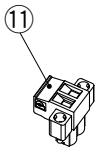

Power supply connector (2 pcs.)

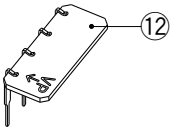

Terminating resistor (1 pc.)
∗ Attached to EX510-GPR1 only

Accessories

GW Unit

No.	Description	Applications
1	**Communication socket (BUS)**	For connecting with a network, using the communication connector (⑩), which is part of the accessories
2	**Power supply socket (PWR(V))**	Supplies power for output devices, which have a power supply connector (⑪), such as a solenoid valve
3	**Power supply socket (PWR)**	Supplies power for input devices, which have a power supply connector (⑪), such as a sensor
4	**Branch connector (for input) on GW unit side**	Connects input units, etc., using a branch cable (EX510-FC□□)
5	**Branch connector (for output) on GW unit side**	Connects the SI unit (manifold valves) etc., using the branch cable (EX510-FC□□)
6	**FG terminal**	Used for grounding
7	**Mounting hole**	Used for mounting the unit with two M4 screws
8	**Mounting groove for DIN rail**	Used for mounting the unit to a DIN rail
9	**Display, Switch setting part**	Displays the LED corresponding to the unit's condition, address setting, and the communication speed for the switches
10	**Communication connector**	Used for connecting the network cable
11	**Power supply connector**	Used for connecting the power supply cable
12	**Terminating resistor**	Connects the terminating resistor to both ends of a unit in the transmission line

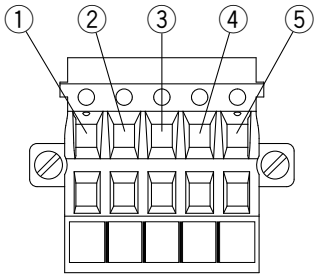

Communication Connector Pin Assignment

Part no.	Communication protocol	Pin assignment and the corresponding wire color				
		①	②	③	④	⑤
EX510-GMJ1	CC-Link	DA (Blue)	DB (White)	DG (Yellow)	SLD	FG
EX510-GDN1	DeviceNet™	V- (Black)	CAN_L (Blue)	Drain	CAN_H (White)	V+ (Red)
EX510-GPR1	PROFIBUS DP	VP	RxD/TxD-N (Green)	DGND	RxD/TxD-P (Red)	SHIELD

LED Indicator

EX510-GMJ1 (CC-Link)

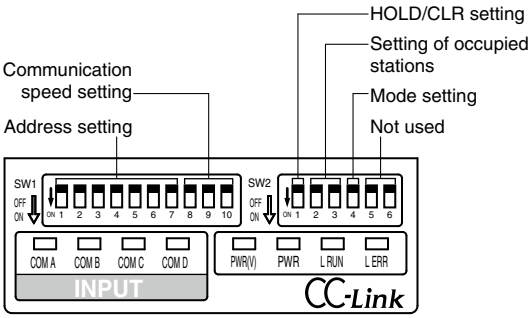

Display	Contents	Indicator light condition
PWR(V)	The output power supply voltage is supplied as specified. The output power supply voltage is not supplied as specified.	Light is turned on. Light is turned off.
PWR	When the input and the power for the gateway is being supplied When the input and the power for the gateway is not being supplied	Light is turned on. Light is turned off.
L RUN	When transmission is working properly When transmission is interrupted	Light is turned on. Light is turned off.
L ERR	When there is an error in the transmission When setting the station number while being energized When the transmission speed setting switch is changed When the transmission is working properly	Light is turned on. Light is turned on. (Blinks at 0.4 second intervals) Light is turned off.
COM A to D	When COM A to D are receiving data When COM A to D are not receiving data	Light is turned on.*1 Light is turned off.

*1 Input unit (Input device) is connected and will illuminate when communication is working properly.

EX510-GDN1 (DeviceNet™)

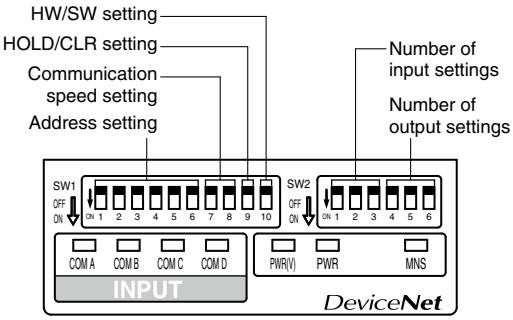

Display	Contents	Indicator light condition
PWR(V)	The output power supply voltage is supplied as specified. The output power supply voltage is not supplied as specified.	Light is turned on. Light is turned off.
PWR	When the input and the power for the gateway is being supplied When the input and the power for the gateway is not being supplied	Light is turned on. Light is turned off.
MNS	When the power supply is OFF, off-line, or checking the MAC ID duplication When I/O connection is on stand by (On-line state) I/O connection installation is completed (On-line state) I/O connection, time-out (communication irregularity in light degrees) MAC ID duplication error, or BUS OFF error (communication error in serious conditions)	Light is turned off. Green light blinks. Green light is turned on. Red light blinks. Red light is turned on.
COM A to D	When COM A to D are receiving data When COM A to D are not receiving data	Light is turned on.*1 Light is turned off.

*1 Input unit (Input device) is connected and will illuminate when communication is working properly.

EX510-GPR1 (PROFIBUS DP)

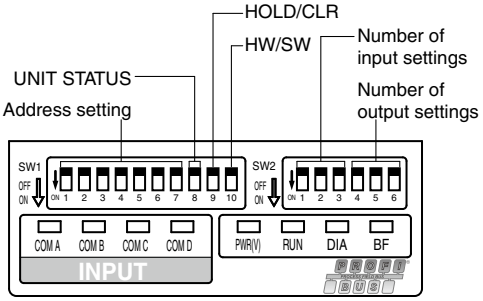

Display	Contents	Indicator light condition
PWR(V)	The output power supply voltage is supplied as specified. The output power supply voltage is not supplied as specified.	Light is turned on. Light is turned off.
RUN	When the input and the power for the gateway is being supplied When the input and the power for the gateway is not being supplied	Light is turned on. Light is turned off.
DIA	When the extended diagnostic information is available When the extended diagnostic information is not available	Light is turned on. Light is turned off.
BF	When PROFIBUS DP communication is working improperly When PROFIBUS DP communication is working properly	Light is turned on. Light is turned off.
COM A to D	When COM A to D are receiving data When COM A to D are not receiving data	Light is turned on.*1 Light is turned off.

*1 Input unit (Input device) is connected will illuminate when communication is working properly.

Internal Circuit

EX510-GMJ1 (CC-Link)

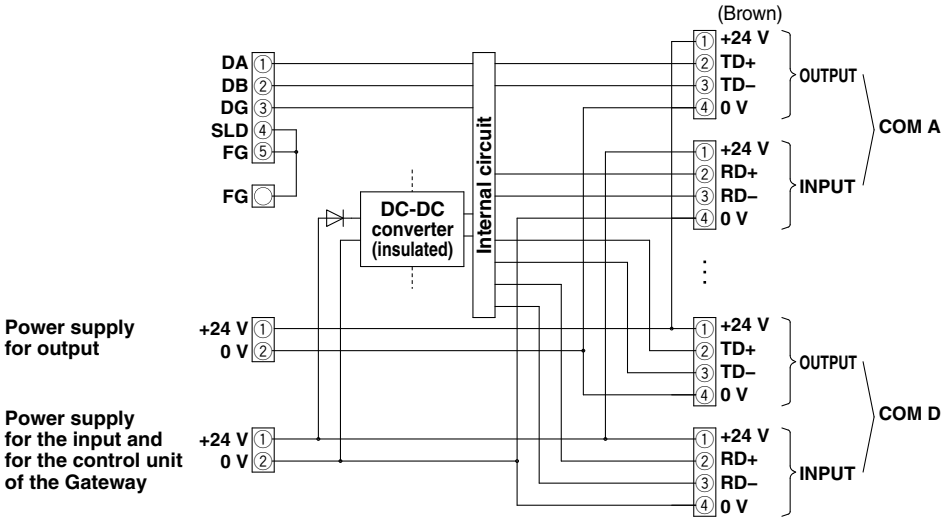

EX510-GDN1 (DeviceNet™)

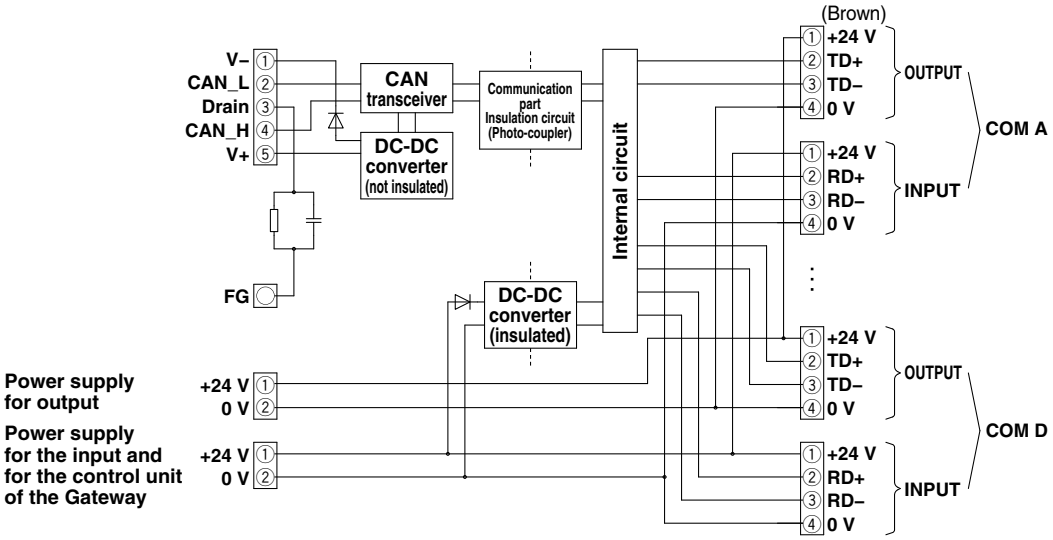

EX510-GPR1 (PROFIBUS DP)

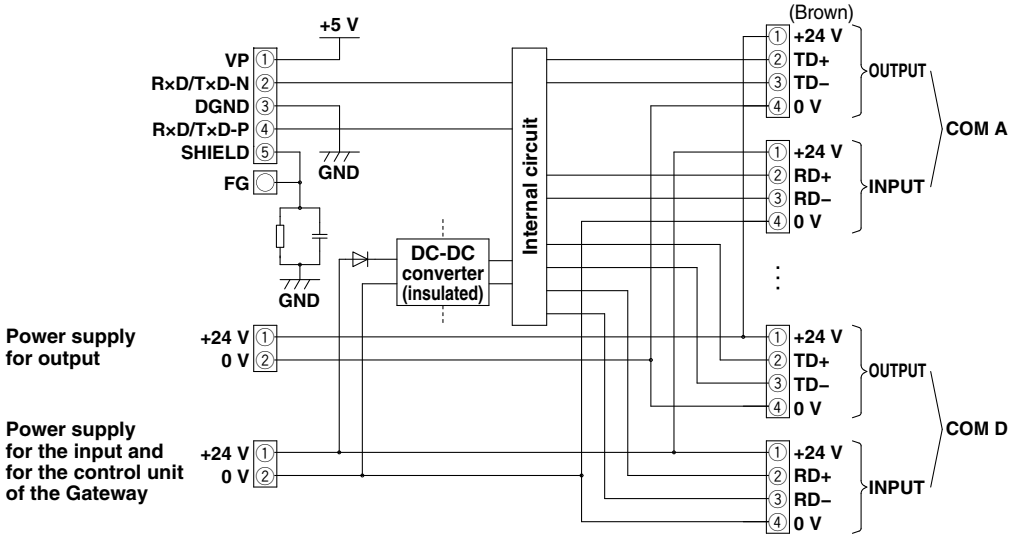

Flexible I/O Setting Examples

EX510-GMJ1 (CC-Link)

The occupying number of the Gateway units can be changed flexibly by setting a switch.
Refer to the Operation Manual for details.

(Side view of the Gateway unit ▒ are parts in use.)

3 stations occupied mode
Input: 16 inputs 4-branch settings (at the time
Output: 16 outputs 4-branch settings of shipment)

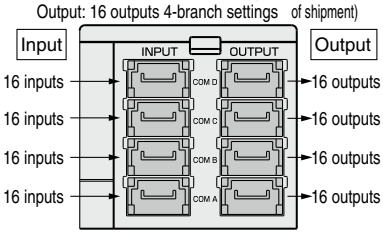

Input/Output total 128 points

2 stations occupied mode A
Input: 16 inputs 2-branch settings
Output: 16 outputs 2-branch settings

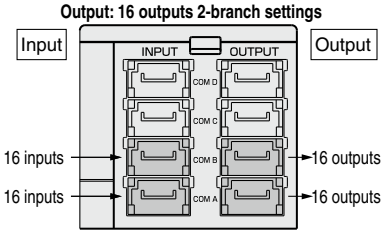

Input/Output total 64 points

2 stations occupied mode B
Input: 8 inputs 4-branch settings
Output: 8 outputs 4-branch settings

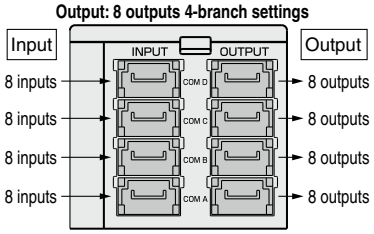

Input/Output total 64 points

EX510-GDN1 (DeviceNet™)

The occupying number of points in the Gateway units can be changed flexibly by setting a switch.
The occupying number of inputs and outputs can be set respectively. (Figures below are examples of the flexibility of setting the output occupied numbers.)
Refer to the Operation Manual for details.

(Side view of the Gateway unit ▒ are parts in use.)

Input: 16 inputs 4-branch settings (at the time
Output: 16 outputs 4-branch settings of shipment)

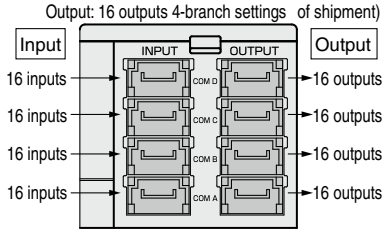

Input/Output total 128 points

Input: 16 inputs 4-branch settings
Output: Unused settings

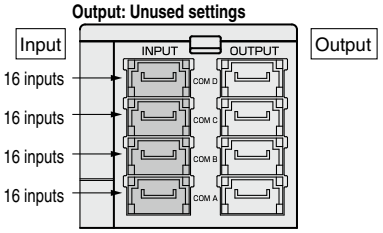

Input/Output total 64 points

Input: 16 inputs 4-branch settings
Output: 8 outputs 2-branch settings

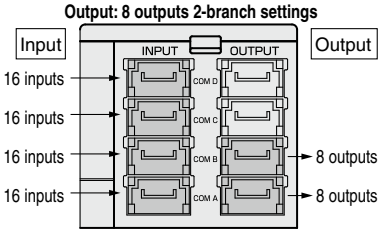

Input/Output total 80 points

Input: 16 inputs 4-branch settings
Output: 16 outputs 1-branch setting

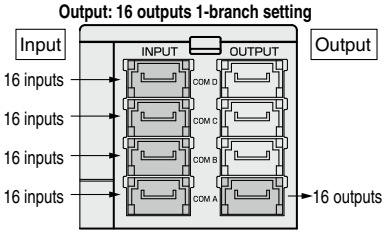

Input/Output total 80 points

Input: 16 inputs 4-branch settings
Output: 8 outputs 4-branch settings

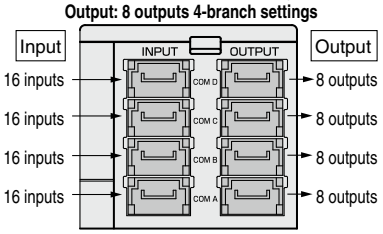

Input/Output total 96 points

Input: 16 inputs 4-branch settings
Output: 16 outputs 2-branch settings

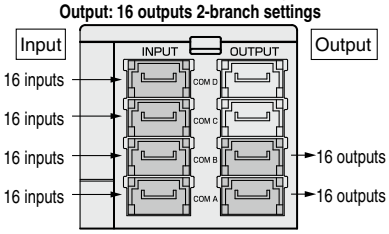

Input/Output total 96 points

EX510-GPR1 (PROFIBUS DP)

The occupying number of points in the Gateway units can be changed flexibly by setting a switch.
The occupying number of inputs and outputs can be set respectively. (Figures below are examples of the flexibility of setting the output occupied numbers.)
Refer to the Operation Manual for details.

(Side view of the Gateway unit ▒ are parts in use.)

Input: 16 inputs 4-branch settings (at the time
Output: 16 outputs 4-branch settings of shipment)

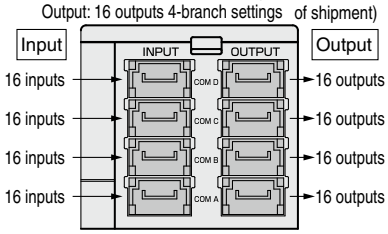

Input/Output total 128 points

Input: Unused settings
Output: 16 outputs 4-branch settings

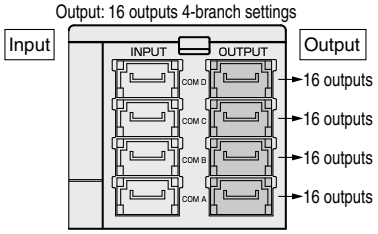

Input/Output total 64 points

Input: 8 inputs 2-branch settings
Output: 16 outputs 4-branch settings

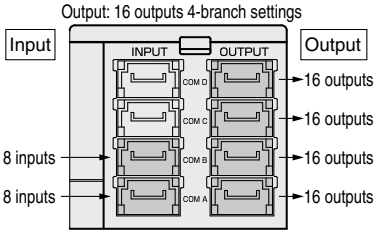

Input/Output total 80 points

Input: 8 inputs 3-branch settings
Output: 16 outputs 4-branch settings

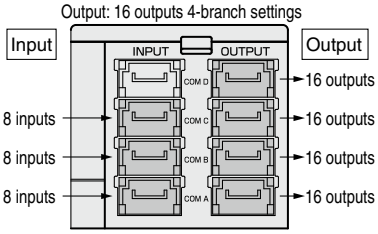

Input/Output total 88 points

Input: 8 inputs 4-branch settings
Output: 16 outputs 4-branch settings

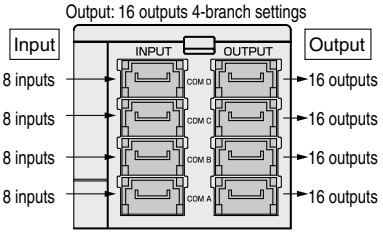

Input/Output total 96 points

Input: 16 inputs 3-branch settings
Output: 16 outputs 4-branch settings

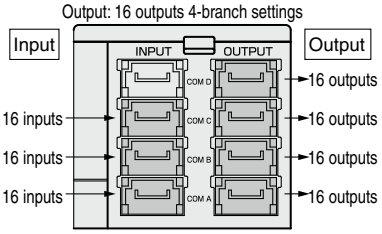

Input/Output total 112 points

SI Unit

How to Order

EX510-S 0 0 1 □

Output specifications

0	Sink/NPN (Positive common)
1	Source/PNP (Negative common)

Applicable valve manifold

1	Plug-lead manifold
2	Plug-in manifold

Mounting specifications

Nil	Screw mounting
A	Mounting on DIN rail vertically
B	Mounting on DIN rail horizontally
C	Mounting on DIN rail horizontally (Dedicated for the SJ manifold)*1

*1 Applicable for EX510-S□02 only

Specifications

Model		EX510-S001□, S002□	EX510-S101□, S102□
Output type		Sink/NPN (Positive common)	Source/PNP (Negative common)
Number of outputs		16 outputs	
Rated load voltage		24 VDC	
Max. load current		Meet the following 3 conditions: 1. 0.25 A or less per point 2. 1.4 A or less per unit 3. Total current for OUT 0 to 7 must be 1 A or less. Total current for OUT 8 to 15 must be 1 A or less.	
Enclosure		Short-circuit protection	
Current consumption		50 mA or less (SI unit internal parts)	
Environmental resistance	**Enclosure**	IP20	
	Operating temperature range	–10 to 50°C	
	Operating humidity range	35 to 85%RH (No condensation)	
	Withstand voltage	500 VAC for 1 minute between whole external terminal and FG	
	Insulation resistance	10 MΩ or more (500 VDC) between whole external terminal and FG	
Standards		CE marking, UL (CSA)	
Weight		EX510-S□01: 40 g EX510-S□02: 50 g	EX510-S□01A, B: 80 g EX510-S□02A, B, C: 90 g (including accessories)

Dimensions

EX510-S□01

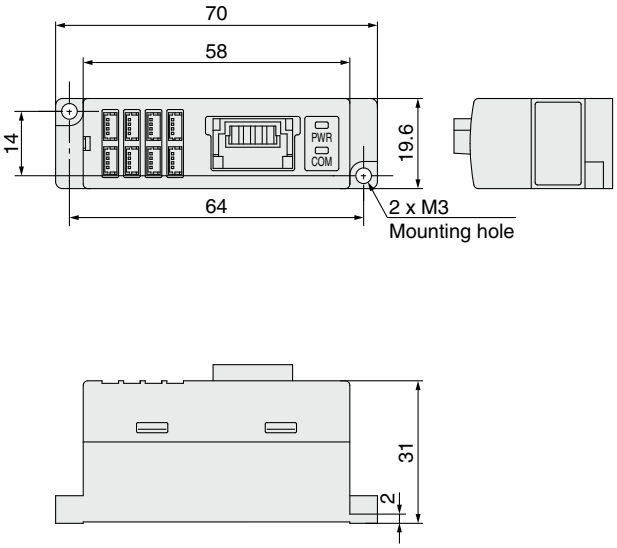

EX510-S□01A

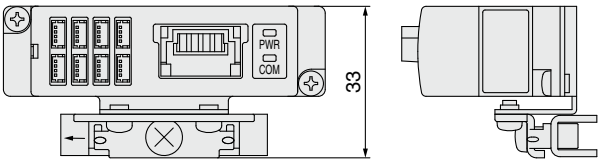

EX510-S□01B

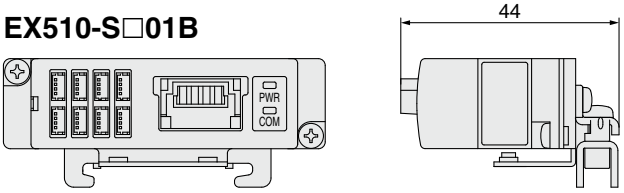

EX510-S□02C

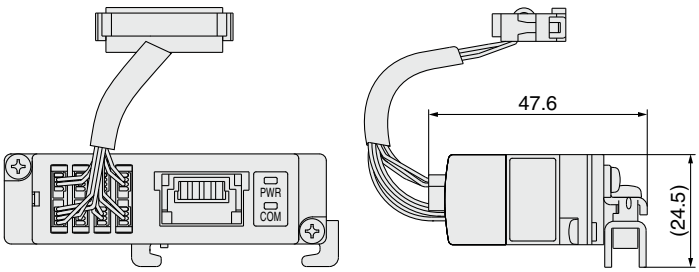

Parts Description/LED Indicator

You can place an order for the manifold (valve series mentioned below) with the SI unit. For further information, please refer to the individual valve/manifold catalog. Also, you can change the system of your device by retrofitting the SI unit with the manifold already purchased.

EX510-S□01
(SY, SYJ, S0700, VQZ series)

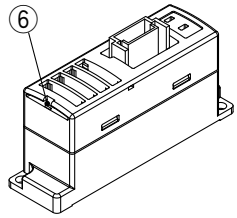

EX510-S□01A
(SY series (Type 45))

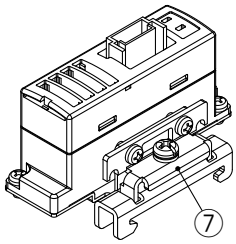

EX510-S□01B

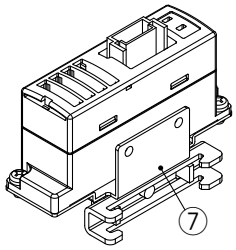

EX510-S□02

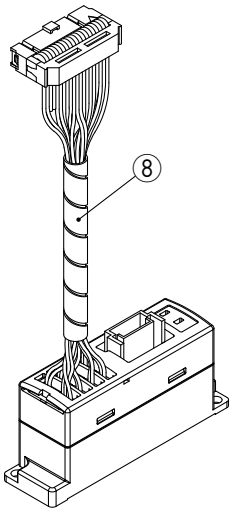

EX510-S□02A
(SY, VQ series)

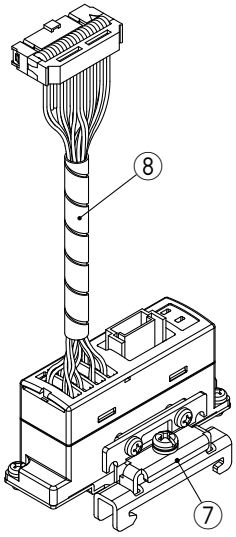

EX510-S□02B
(SZ, SQ series)

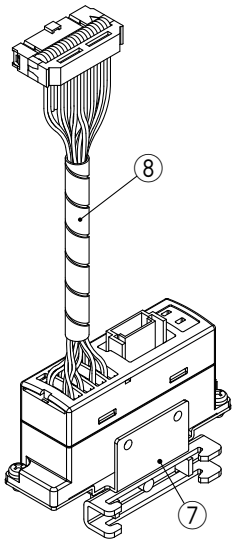

EX510-S□02C
(SJ series)

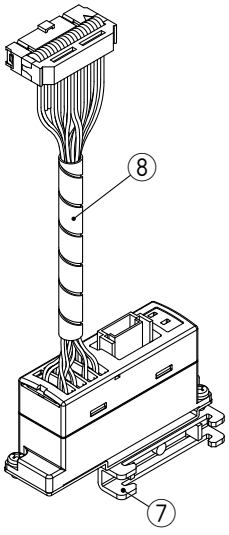

Accessories

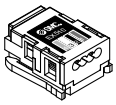

Branch connector (2 pcs.)
(EX510-LC1)

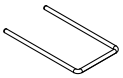

Connector lock pin
(1 pc.)

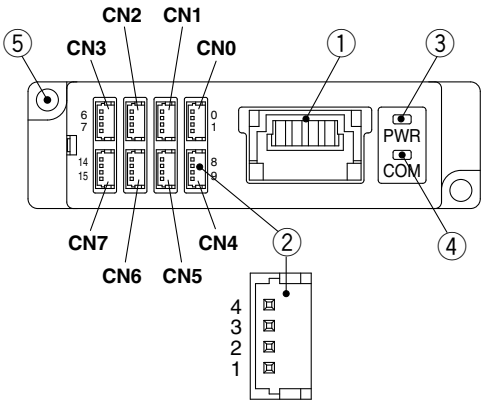

SI Unit

No.	Description	Applications
1	**Branch connector on the SI side unit**	For press-fitting the branch connector (⑨) to the branch cable (EX510-FC□□) for connecting with the GW unit
2	**Connector for connecting a load**	Connects an output device such as a solenoid valve
3	**LED for power supply**	Light ON: Power supply ON (Normal) state Light OFF: Power supply OFF state
4	**LED for communications**	Light ON: When receiving data Light OFF: When there is no communication data
5	**Mounting hole**	Used for mounting the unit with two M3 screws
6	**Connector lock pin insertion part**	Used for attaching a unit with a connector lock pin (⑩) (EX510-S□02□ is inserted.)
7	**Mounting bracket**	Can be mounted on DIN rail
8	**Conversion cable assembly**	The cable assembly used for connecting to the plug-in valve manifold (MIL connector, 20 pins, socket)

Internal Circuits and Wiring Examples

EX510-S001/NPN output

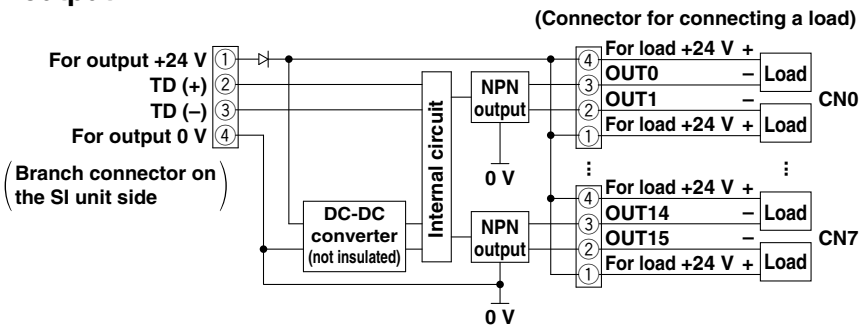

EX510-S002/NPN output

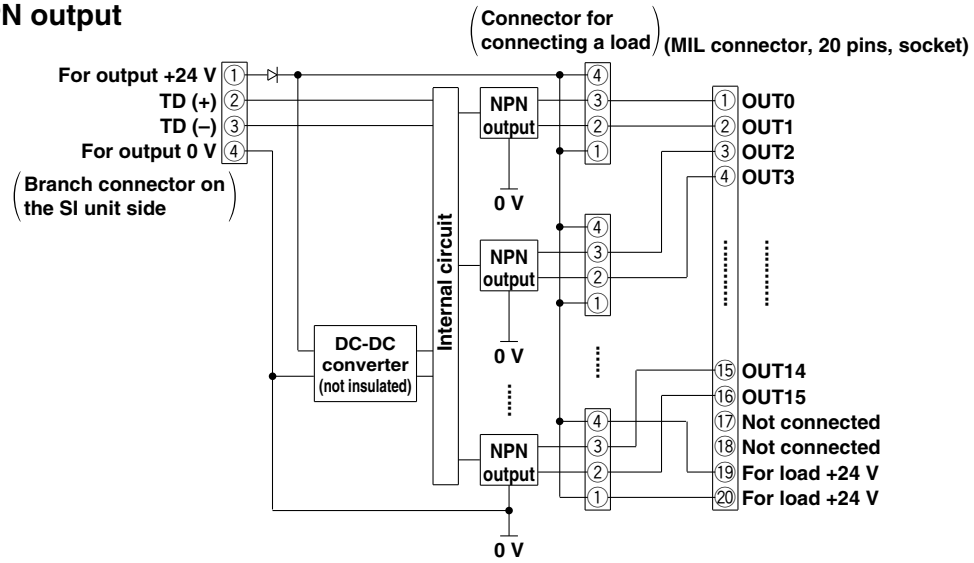

EX510-S101/PNP output

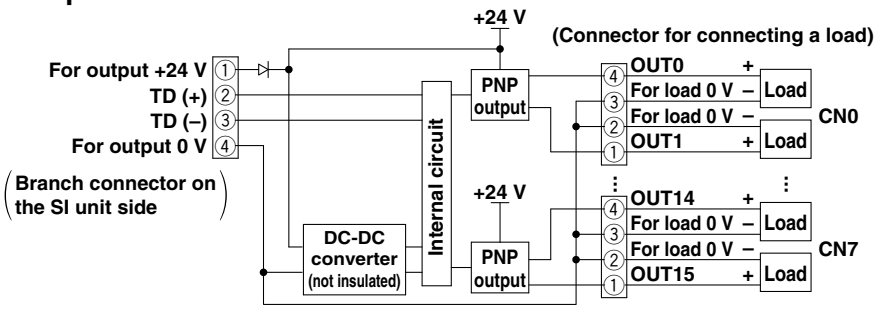

EX510-S102/PNP output

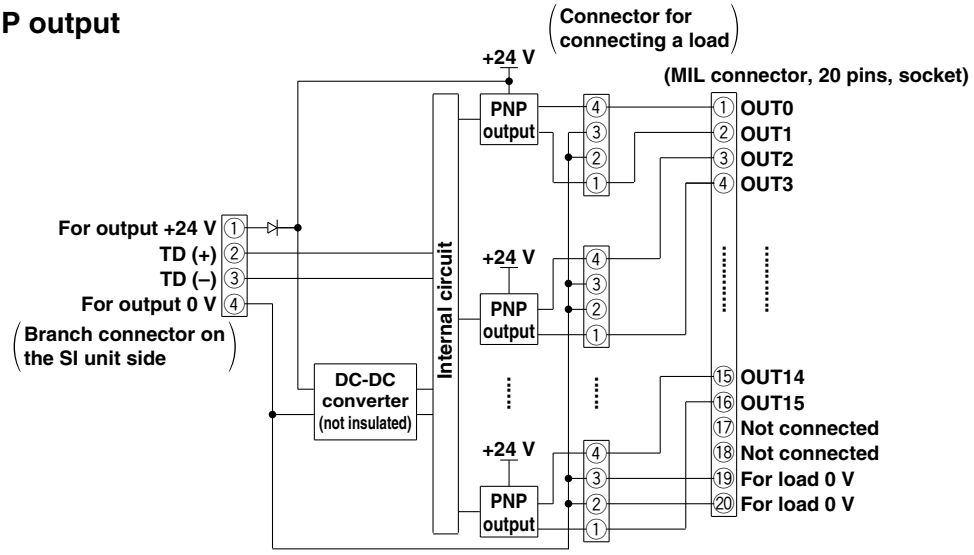

Input Unit

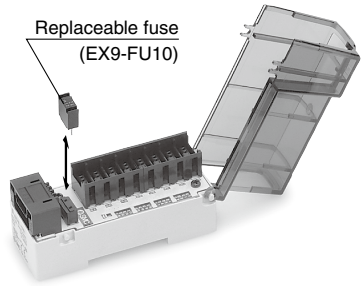

1 connector, 2-input type

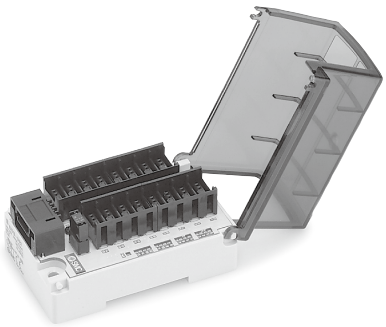

1 connector, 1 input type

How to Order

EX510-DX N 1

Compatible sensor

N	NPN output
P	PNP output
B	2-wire type

Unit type

1	1 connector, 2-input type
2	1 connector, 1 input type

∗ B (2-wire type) is available with 1 connector, 2-input type only.

Specifications

Model		EX510-DXN□	EX510-DXP□	EX510-DXB1
Input type		NPN sensor input	PNP sensor input	2-wire type
Number of inputs		16 inputs		
Sensor supply voltage		24 VDC		
Max. sensor supply current		0.2 A/Point, 0.9 A/Unit		
Consumption current		100 mA (Input unit internal parts)		
Input resistance		5.6 kΩ		
Rated input current		Approx. 4 mA		
ON voltage/ON current		17 V or greater/2.5 mA or greater (Between input terminal and for sensor + 24 VDC)	17 V or greater/2.5 mA or greater (Between input terminal and for sensor 0 VDC)	
OFF voltage/ OFF current		7 V or less/1 mA or less (Between input terminal and for sensor + 24 VDC)	7 V or less/1 mA or less (Between input terminal and for sensor 0 VDC)	
Display		Green LED (illuminated when turned ON)		
Environment	Enclosure	IP10		
	Operating temperature range	–10 to 50°C		
	Operating humidity range	35 to 85%RH (No condensation)		
	Withstand voltage	500 VAC for 1 minute between whole external terminal and FG		
	Insulation resistance	10 MΩ or more (500 VDC) between whole external terminal and FG		
Standards		CE marking, UL (CSA)		
Weight		EX510-DX□1: 90 g EX510-DX□2: 110 g (including accessories)		

Dimensions

EX510-DX□1

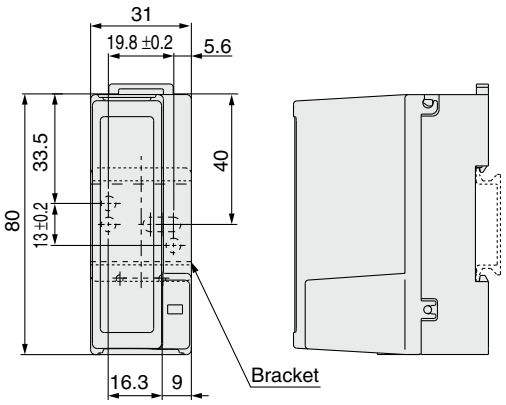

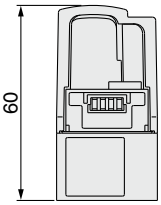

EX510-DX□2

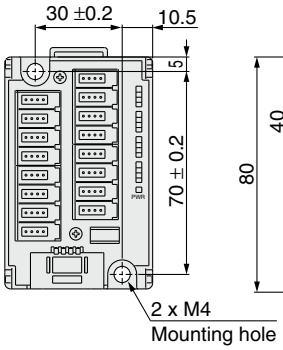

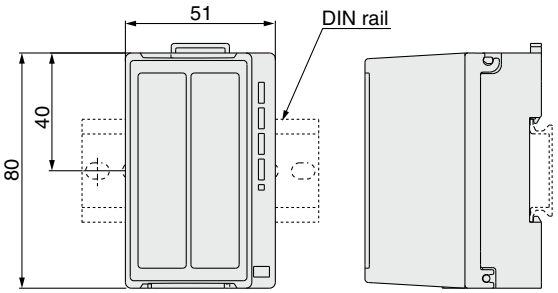

Shown with cover removed

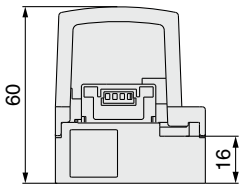

Bracket (accessory for EX510-DX□1)

Mounting example 1

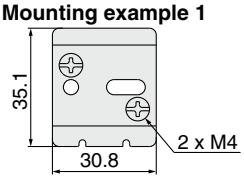

Mounting example 2

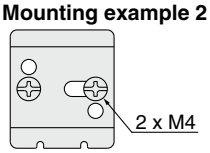

Parts Description/LED Indicator

EX510-DX□1

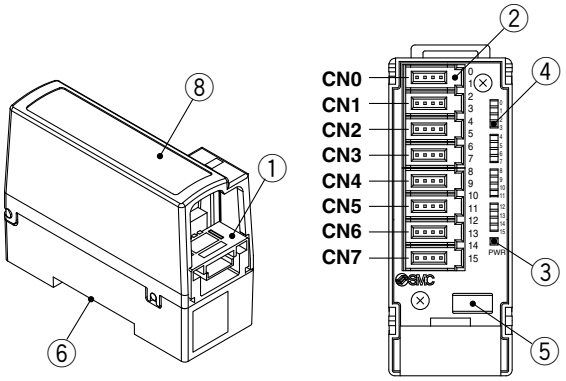

Shown with cover removed

EX510-DX□2

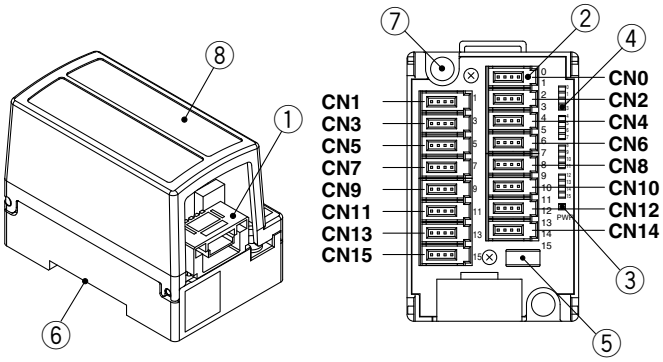

Shown with cover removed

No.	Description	Applications
1	**Branch connector on the input unit side**	For press-fitting the branch connector (⑨) to the branch cable (EX510-FC□□) for connecting with the GW unit
2	**e-con connector**	Connecting sensor, etc.
3	**LED for power supply**	Light ON: Power supply ON (Normal) state Light OFF: Power supply OFF state
4	**LED for display**	Light ON: When the input for sensor signal is turned ON Light OFF: When the input for sensor signal is turned OFF
5	**Fuse**	Replaceable fuse (EX9-FU10)
6	**Mounting groove for DIN rail**	For attaching to a DIN rail or when mounting with screws to an accessory bracket (⑩)
7	**Mounting hole**	Used for mounting the unit with two M4 screws
8	**Cover**	For protecting the sensor cables Place a marker label (⑪) on the top of the body.

Accessories

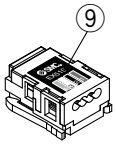

Branch connector (2 pcs.)
(EX510-LC1)

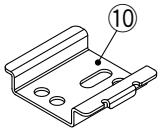

Bracket
∗ Attached to
EX510-DX□1 only

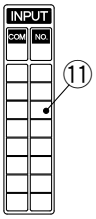

Marker label

Internal Circuits and Wiring Examples

EX510-DXB1/Input unit for 2-wire type (1 connector, 2-input type)

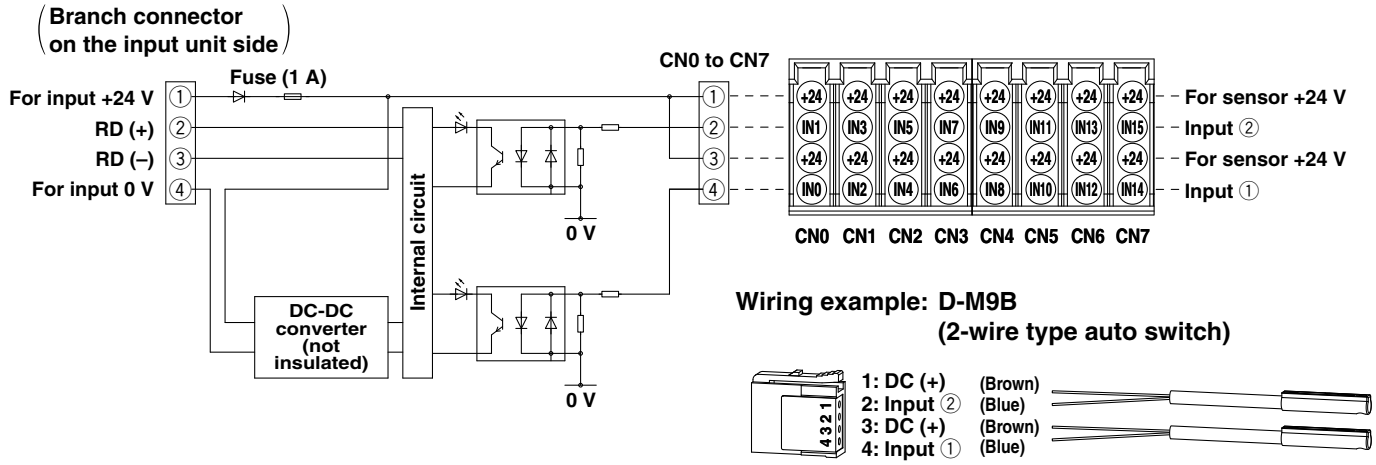

EX510-DXN1/Input unit for NPN (1 connector, 2-input type)

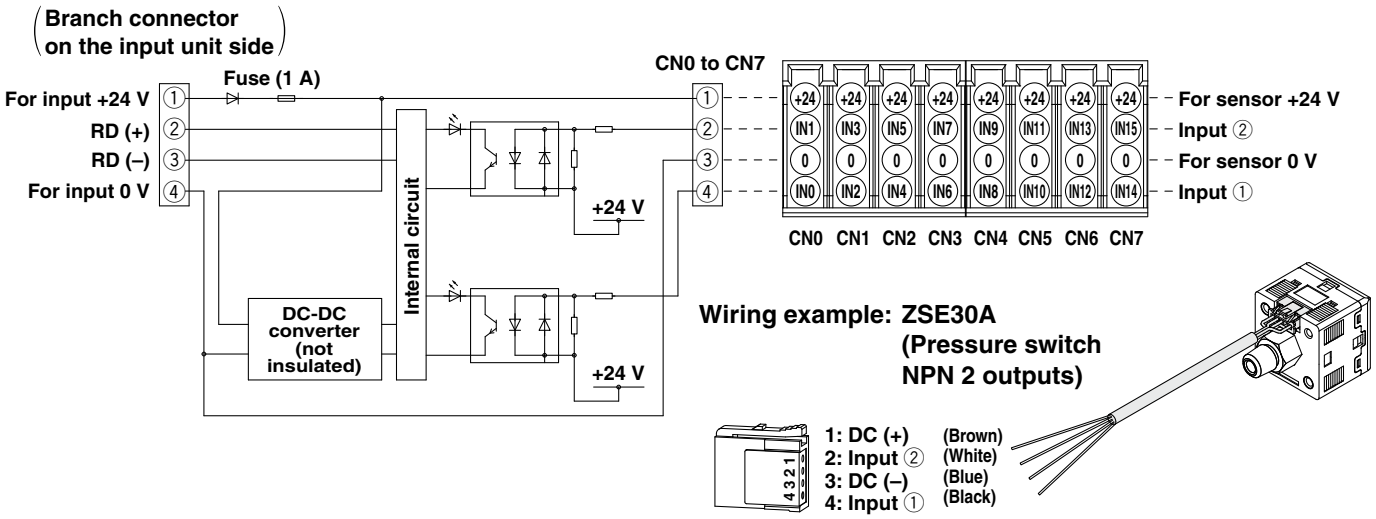

EX510-DXP1/Input unit for PNP (1 connector, 2-input type)

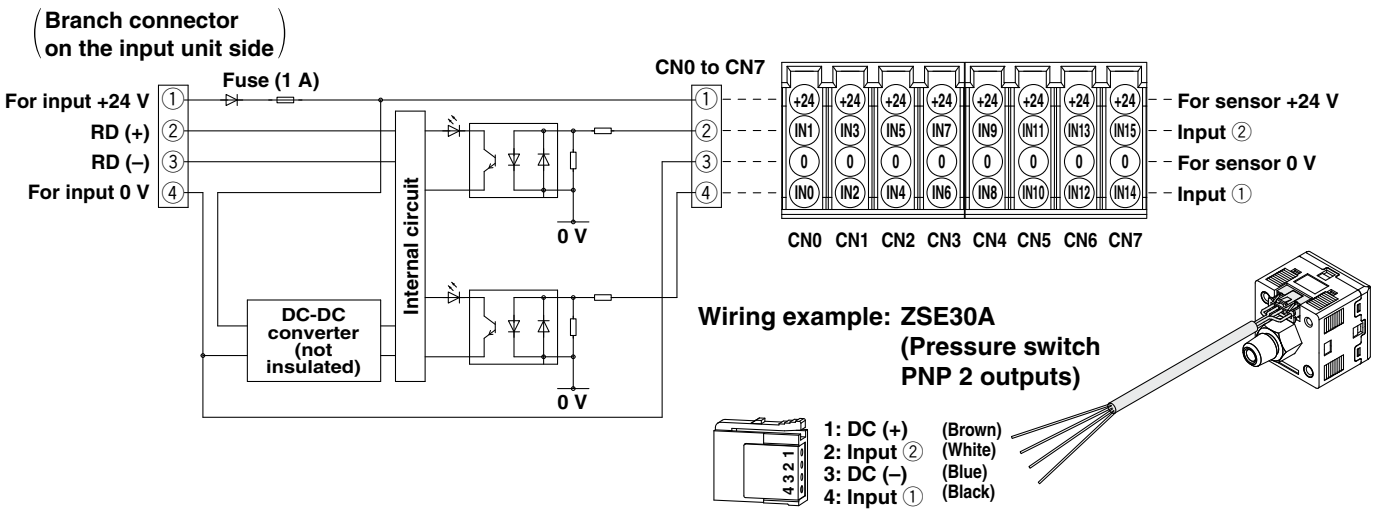

Internal Circuits and Wiring Examples

EX510-DXN2/Input unit for NPN (1 connector, 1 input type)

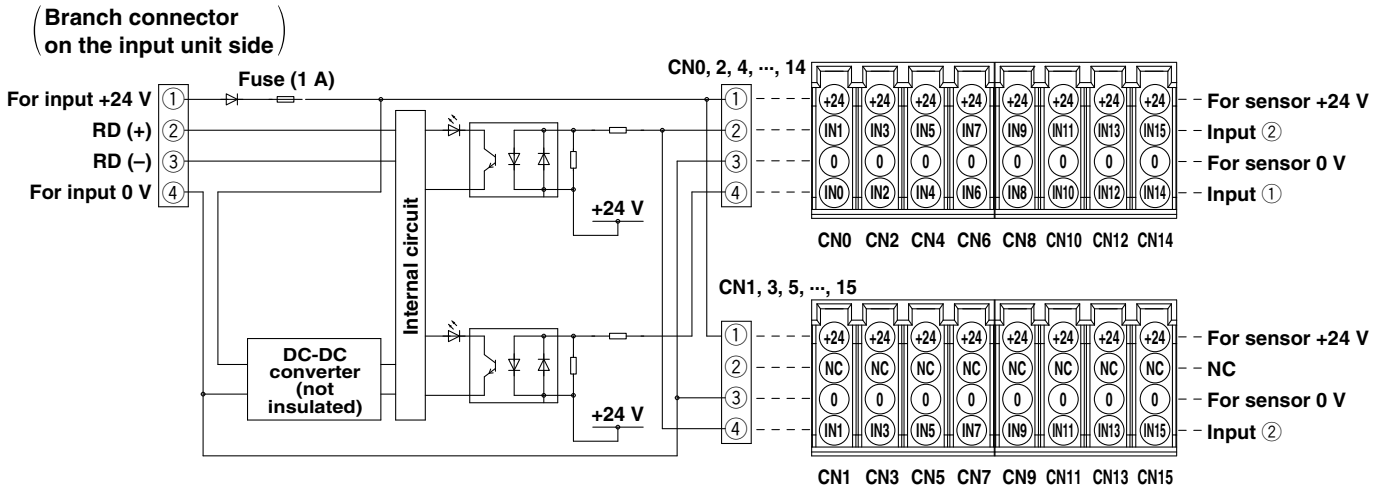

Wiring example: D-M9N
(3-wire type auto switch, NPN output)

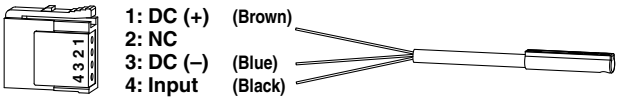

EX510-DXP2/Input unit for PNP (1 connector, 1 input type)

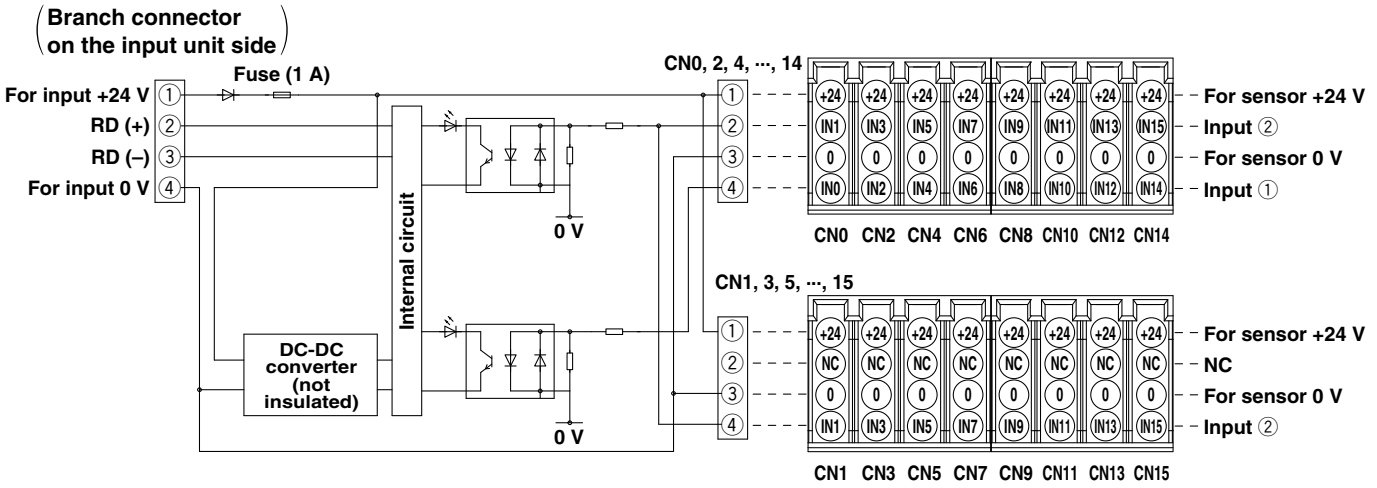

Wiring example: D-M9P
(3-wire type auto switch, PNP output)

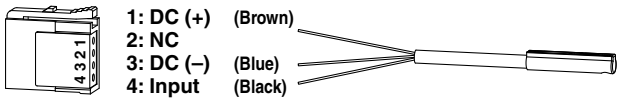

Output Unit

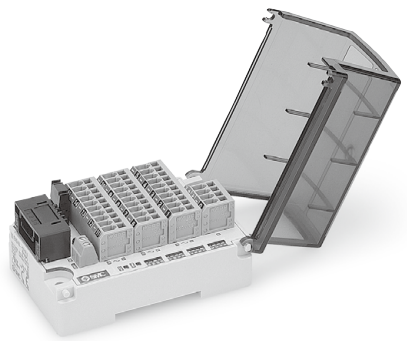

How to Order

EX510-DY P 3

Output specifications

N	Sink/NPN output
P	Source/PNP output

Connector type

3	Terminal box type (Internal power supply)
4	Terminal box type (External power supply)

Specifications

Model		EX510-DYN3	EX510-DYP3	EX510-DYN4	EX510-DYP4
Output type		Sink/NPN (Positive common)	Source/PNP (Negative common)	Sink/NPN (Positive common)	Source/PNP (Negative common)
Rated load voltage		24 VDC			
Power supply type		Internal power supply (supplied by GW unit)		External power supply (supplied by power supply connector)	
Applicable cable for power supply connector		—		0.14 to 1.5 mm² (AWG16 to 26)	
Number of outputs		16 outputs			
Output connector type		Spring type			
Applicable cable		0.08 to 1.5 mm² (AWG16 to 28)			
Max. load current		Meet the following 3 conditions: 1. 0.5 A or less per point 2. 1 A or less per unit 3. The total current for OUT0 to 7 must be 1 A or less. The total current for OUT8 to 15 must be 1 A or less.		Meet the following 3 conditions: 1. 0.5 A or less per point 2. 3 A or less per unit 3. The total current for OUT0 to 7 must be 1.5 A or less. The total current for OUT8 to 15 must be 1.5 A or less.	
Protection		Short-circuit protection			
Current consumption		50 mA or less (inside a unit)			
Environmental resistance	**Enclosure**	IP10			
	Operating temperature range	–10 to 50°C			
	Operating humidity range	35 to 85%RH (No condensation)			
	Withstand voltage	500 VAC for 1 minute between whole external terminal and FG			
	Insulation resistance	10 MΩ or more (500 VDC) between whole external terminal and FG			
Standards		CE marking, UL (CSA)			
Weight		130 g (including accessories)			

Dimensions

EX510-DY□□

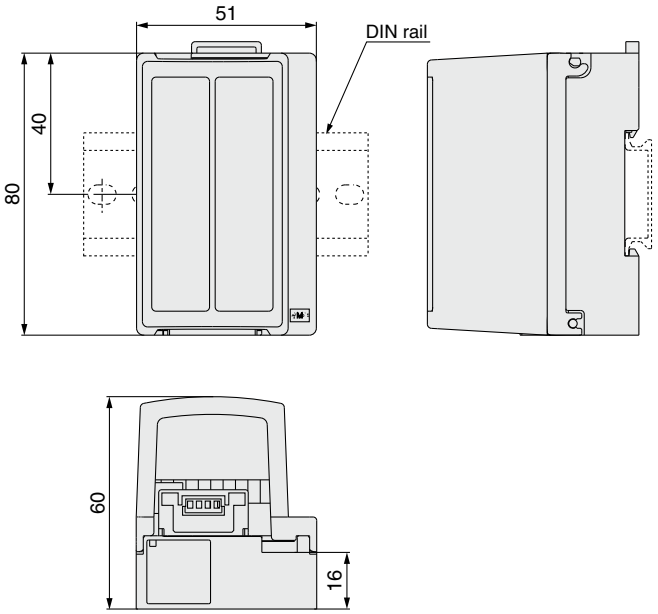

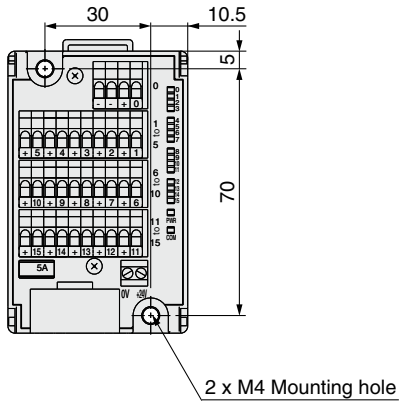

Shown with cover removed

Parts Description/LED Indicator

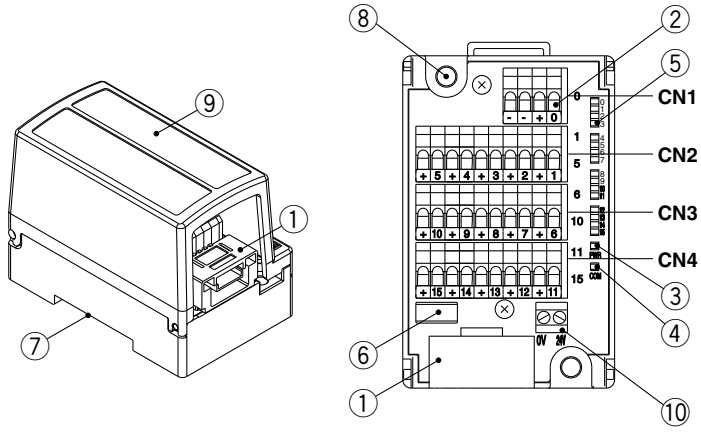

Shown with cover removed

Output Unit

No.	Description	Applications
1	**Branch connector on the output unit side**	For press-fitting the branch connector (⑪) to the branch cable (EX510-FC□□) for connecting with GW unit
2	**Output terminal box**	Connect the output load, etc.
3	**LED for power supply**	Light ON: Power supply ON (Normal) state Light OFF: Power supply OFF state
4	**LED for communications**	Light ON: When receiving data Light OFF: When there is no communication data
5	**LED for display**	Light ON: When the output signal is turned ON Light OFF: When the output signal is turned OFF
6	**Fuse**	Replaceable fuse
7	**Mounting groove**	Used for mounting the unit on the DIN rail
8	**Mounting hole**	Used for mounting the unit with two M4 screws
9	**Cover**	For protecting the output load cable Place a marker label (⑫) on the top of the body.
10	**Terminal box for external power supply**	Terminal for power supply (EX510-DYN4, EX510-DYP4 only)

Accessories

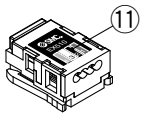

Branch connector (2 pcs.)
(EX510-LC1)

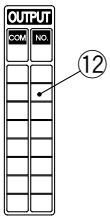

Marker label

Internal Circuits and Wiring Examples

EX510-DYN3/Output unit for NPN (Internal power supply type)

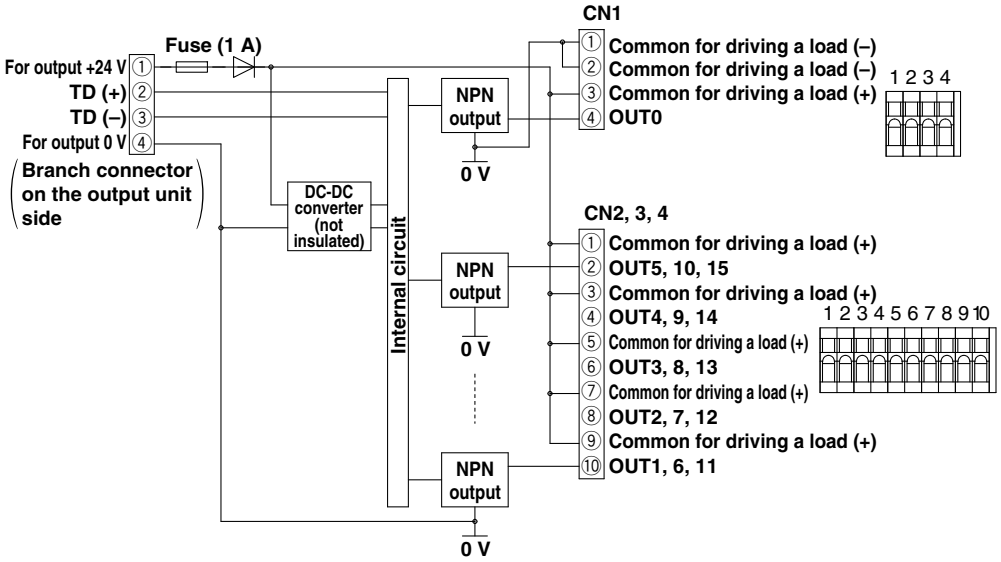

Internal circuit diagram

Terminal Block Connector (CN1)

No.	Description	Functions
		CN1
1	**COM**	Common for driving a load (–)
2	**COM**	
3	**COM**	Common for driving a load (+)
4	**Output**	OUT0

Terminal Block Connector (CN2, CN3, CN4)

No.	Description	Functions		
		CN2	CN3	CN4
1	**COM**	Common for driving a load (+)		
2	**Output**	OUT5	OUT10	OUT15
3	**COM**	Common for driving a load (+)		
4	**Output**	OUT4	OUT9	OUT14
5	**COM**	Common for driving a load (+)		
6	**Output**	OUT3	OUT8	OUT13
7	**COM**	Common for driving a load (+)		
8	**Output**	OUT2	OUT7	OUT12
9	**COM**	Common for driving a load (+)		
10	**Output**	OUT1	OUT6	OUT11

Internal Circuits and Wiring Examples

EX510-DYN4/Output unit for NPN (External power supply type)

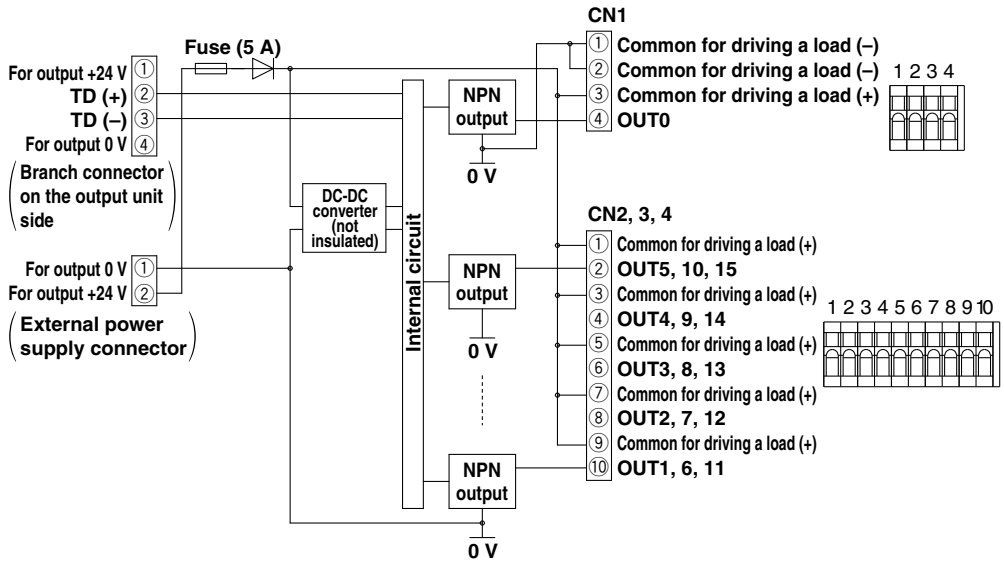

Internal circuit diagram

Terminal Block Connector (CN1)

No.	Description	Functions
		CN1
1	COM	Common for driving a load (–)
2	COM	
3	COM	Common for driving a load (+)
4	Output	OUT0

Terminal Block Connector (CN2, CN3, CN4)

No.	Description	Functions		
		CN2	CN3	CN4
1	COM	Common for driving a load (+)		
2	Output	OUT5	OUT10	OUT15
3	COM	Common for driving a load (+)		
4	Output	OUT4	OUT9	OUT14
5	COM	Common for driving a load (+)		
6	Output	OUT3	OUT8	OUT13
7	COM	Common for driving a load (+)		
8	Output	OUT2	OUT7	OUT12
9	COM	Common for driving a load (+)		
10	Output	OUT1	OUT6	OUT11

EX510-DYP3/Output unit for PNP (Internal power supply type)

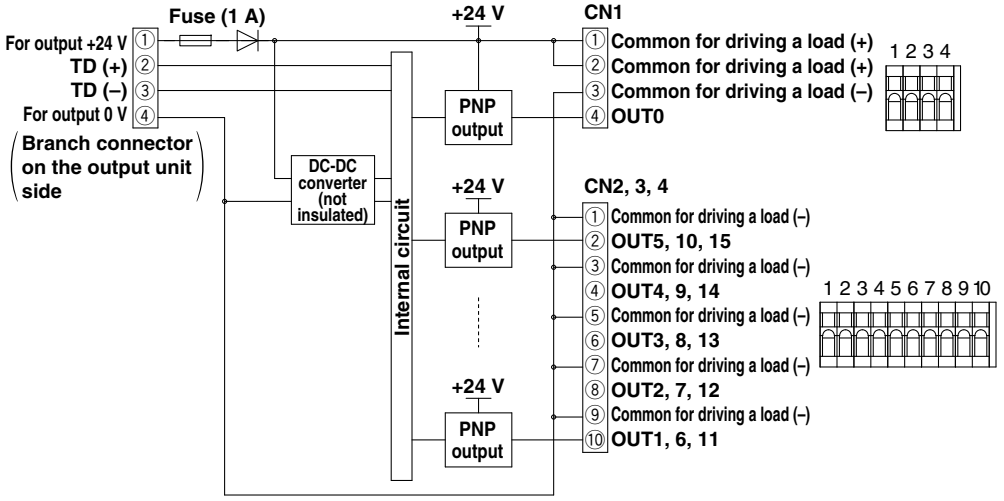

Internal circuit diagram

Terminal Block Connector (CN1)

No.	Description	Functions
		CN1
1	COM	Common for driving a load (+)
2	COM	
3	COM	Common for driving a load (–)
4	Output	OUT0

Terminal Block Connector (CN2, CN3, CN4)

No.	Description	Functions		
		CN2	CN3	CN4
1	COM	Common for driving a load (–)		
2	Output	OUT5	OUT10	OUT15
3	COM	Common for driving a load (–)		
4	Output	OUT4	OUT9	OUT14
5	COM	Common for driving a load (–)		
6	Output	OUT3	OUT8	OUT13
7	COM	Common for driving a load (–)		
8	Output	OUT2	OUT7	OUT12
9	COM	Common for driving a load (–)		
10	Output	OUT1	OUT6	OUT11

Internal Circuits and Wiring Examples

EX510-DYP4/Output unit for PNP (External power supply type)

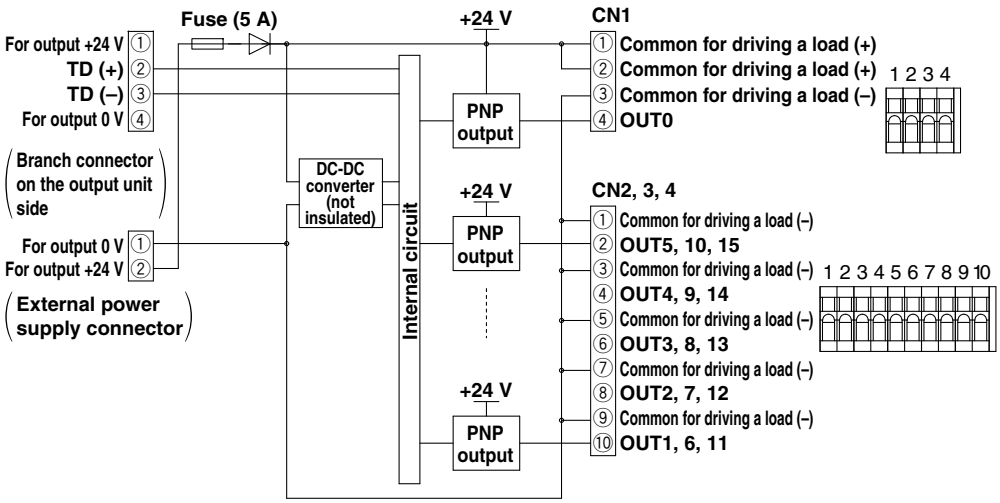

Internal circuit diagram

Terminal Block Connector (CN1)

No.	Description	Functions CN1
1	COM	Common for driving a load (+)
2	COM	
3	COM	Common for driving a load (–)
4	Output	OUT0

Terminal Block Connector (CN2, CN3, CN4)

No.	Description	Functions CN2	CN3	CN4
1	COM	Common for driving a load (–)		
2	Output	OUT5	OUT10	OUT15
3	COM	Common for driving a load (–)		
4	Output	OUT4	OUT9	OUT14
5	COM	Common for driving a load (–)		
6	Output	OUT3	OUT8	OUT13
7	COM	Common for driving a load (–)		
8	Output	OUT2	OUT7	OUT12
9	COM	Common for driving a load (–)		
10	Output	OUT1	OUT6	OUT11

Connection to Output Equipment

The output unit can be connected to 2-port solenoid valves such as the VX, VCW, VDW series and other 3-port valves. Pay attention to the applicable cable and maximum load current for selecting a solenoid valve. The 2-port valves other than shown below can be used as long as they meet the conditions; operating environment (enclosure, etc.), applicable cable and the **maximum load current**. Shown below is the typical 2-port solenoid valve.
Additionally, we recommend a model with surge voltage suppressor is used for the 2-port solenoid valve.

Example) In the case of using 5 VX23 series (rated voltage: 24 VDC/ power consumption: 10.5 W) (calculated under the condition with 5 valves turned on simultaneously)

Operating current per point for a valve
10.5 (W) ÷ 24 (V) = **0.44 (A)** ..... Meets the output unit **load current requirement 1**.

Therefore, the total current of the output unit is:
10.5 (W) ÷ 24 (V) x 5 (pcs.) = **2.2 (A)** ..... Only the external power supply type can meet the **requirement 2**. The internal power supply type cannot be used.

Based on the **requirement 3**, The total current for OUT0 to 7 and OUT8 to 15 are **1.5 (A)** respectively.
Therefore, 3 VX valves are wired for either 3 points of OUT0 to 7. (**1.32 (A)** for OUT0 to 7)
2 VX valves are wired for either 2 points of OUT8 to 15. (**0.88 (A)** for OUT8 to 15)

Other outputs can be made available by reducing the total number of the occupied points for simultaneous operation.

Load Current Requirement

Model	EX510-DYN3	EX510-DYP3	EX510-DYN4	EX510-DYP4
Output type	Sink/NPN (Positive common)	Source/PNP (Negative common)	Sink/NPN (Positive common)	Source/PNP (Negative common)
Power supply type	Internal power supply (supplied by GW unit)		External power supply (supplied by power supply connector)	
Max. load current	Meet the following 3 conditions: 1. 0.5 A or less per point 2. 1 A or less per unit 3. Total current for OUT 0 to 7 must be 1 A or less. Total current for OUT 8 to 15 must be 1 A or less.		Meet the following 3 conditions: 1. 0.5 A or less per point 2. 3 A or less per unit 3. Total current for OUT 0 to 7 must be 1.5 A or less. Total current for OUT 8 to 15 must be 1.5 A or less.	

Direct Operated 2-Port Solenoid Valve

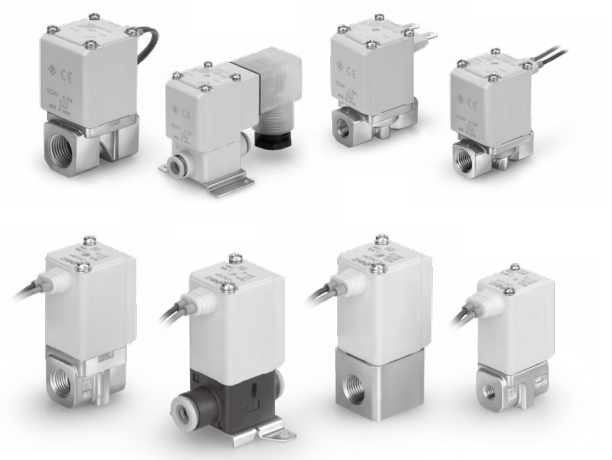

VX

Series	Body material	Port size	Orifice diameter [mmø]	Power consumption [W]
VX21	Al, Resin C37, Stainless steel	1/8 to 1/2 One-touch fitting: ø6 to ø12	2 to 10	4.5
VX22				7
VX23				10.5

VDW

Series	Body material	Port size	Orifice diameter [mmø]	Power consumption [W]
VDW10	Al, Resin C37, Stainless steel	M5 to 1/8 One-touch fitting: ø3.2 to 6	1.0 to 3.2	2.5
VDW20				3

Accessories

❶ Branch cable

A 4 core flat cable is required for connecting between units.

How to Order

EX510-FC 10

Cable length (L)

01	1 m
02	2 m
05	5 m
10	10 m
20	20 m
60∗1	60 m

∗1 Branch cable length is a maximum of 20 m. Use the cable by cutting it into lengths of 20 m or shorter.

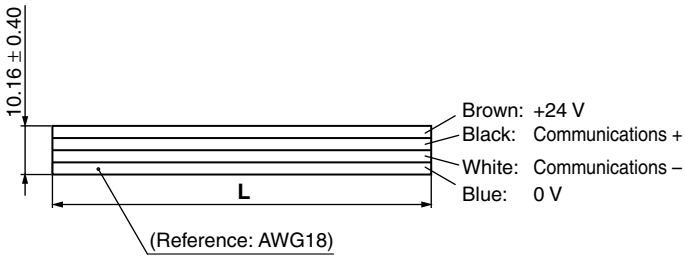

❷ Branch connector (Unit 1 pc.)

Connector required for connecting a branch cable to each unit.
Two branch cables are attached to the SI unit, the input unit and the output unit respectively.

How to Order

EX510-LC1

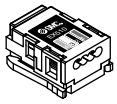

(When press-fitting)

Electrical specifications	
Rated voltage	24 VDC
Rated current	Max. 5.0 A
Contact resistance	20 mΩ or less
Withstand voltage	1000 VAC 1 minute (Leak current 1 mA or less)

❸ Cable assembly for outputting

Cable assembly for connecting the unused outputs in the SI unit.

How to Order

EX510-V S 10 S

Output

S	1 point
W	2 points

Cable length (L)

10	1 m
30	3 m

Valve connector

Nil	None
S	For SY, SYJ series
Q	For VQ, VQZ series∗1

∗1 VQ is compatible with the positive common only.

EX510-VS□S

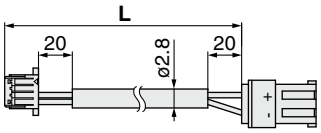

EX510-VS□Q

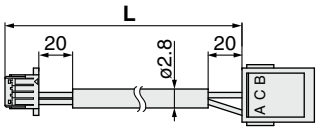

EX510-VW□S

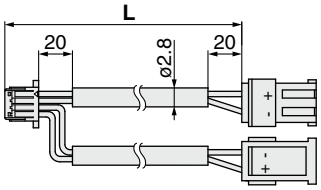

EX510-VW□Q

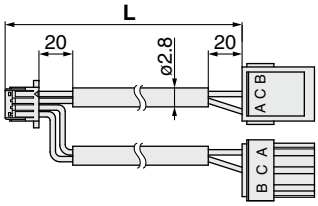

❹ e-con connector

Connector for connecting a sensor to the input unit (EX510-DX□□).
For applicable wire, refer to the right table.

How to Order

ZS-28-C□-□

e-con

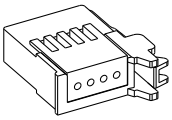

Applicable Wire

SMC part no. (1 pc.)	Cover color	Compliant wire diameter (ø)	Nominal cross sectional area (mm²)∗1	Tyco Electronics Japan G.K. part no.
ZS-28-CA-1	Orange	0.6 to 0.9	0.1 to 0.5 (AWG26 to 20∗2)	3-1473562-4
ZS-28-CA-2	Red	0.9 to 1.0		1-1473562-4
ZS-28-CA-3	Yellow	1.0 to 1.15		1473562-4
ZS-28-CA-4	Blue	1.15 to 1.35		2-1473562-4
ZS-28-CA-5	Green	1.35 to 1.60		4-1473562-4

SMC part no. (1 pc.)	Cover color	Compliant wire diameter (ø)	Nominal cross sectional area (mm²)∗1	3M Japan Limited part no.
ZS-28-C	Red	0.8 to 1.0	0.14 to 0.2 (AWG26 to 24∗2)	37104-3101-000FL
ZS-28-C-1	Yellow	1.0 to 1.2		37104-3122-000FL
ZS-28-C-2	Orange	1.2 to 1.6		37104-3163-000FL
ZS-28-C-3	Green	1.0 to 1.2	0.3 to 0.5 (AWG22 to 20∗2)	37104-2124-000FL
ZS-28-C-4	Blue	1.2 to 1.6		37104-2165-000FL
ZS-28-C-5	Gray	1.6 to 2.0		37104-2206-000FL

SMC part no. (1 pc.)	Cover color	Compliant wire diameter (ø)	Nominal cross sectional area (mm²)∗1	OMRON Corp. part no.
—	Clear	UP to 1.5	0.08 to 0.5 (AWG28 to 20∗2)	XN2A-1470

∗1 Nominal sectional area is the value provided by the manufacturer.
∗2 AWG size is a reference.

Accessories

❺ Replacement fuse

Replacement fuse for the input unit (EX510-DX□□) and the output unit (EX510-DY□□).

How to Order

EX9-FU 10

Fuse rated current

10	1 A
50	5 A

Fuse

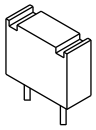

Electrical specifications		
Part no.	**EX9-FU10**	**EX9-FU50**
Applicable model	**EX510-DX□□ EX510-DY□3**	**EX510-DY□4**
Rated current	1 A	5 A
Rated insulation capacity	48 VAC/DC 50 A	
Fuse resistance value	0.145 Ω	18 mΩ

Ordering Examples

Shown is an example for ordering the EX510 series.

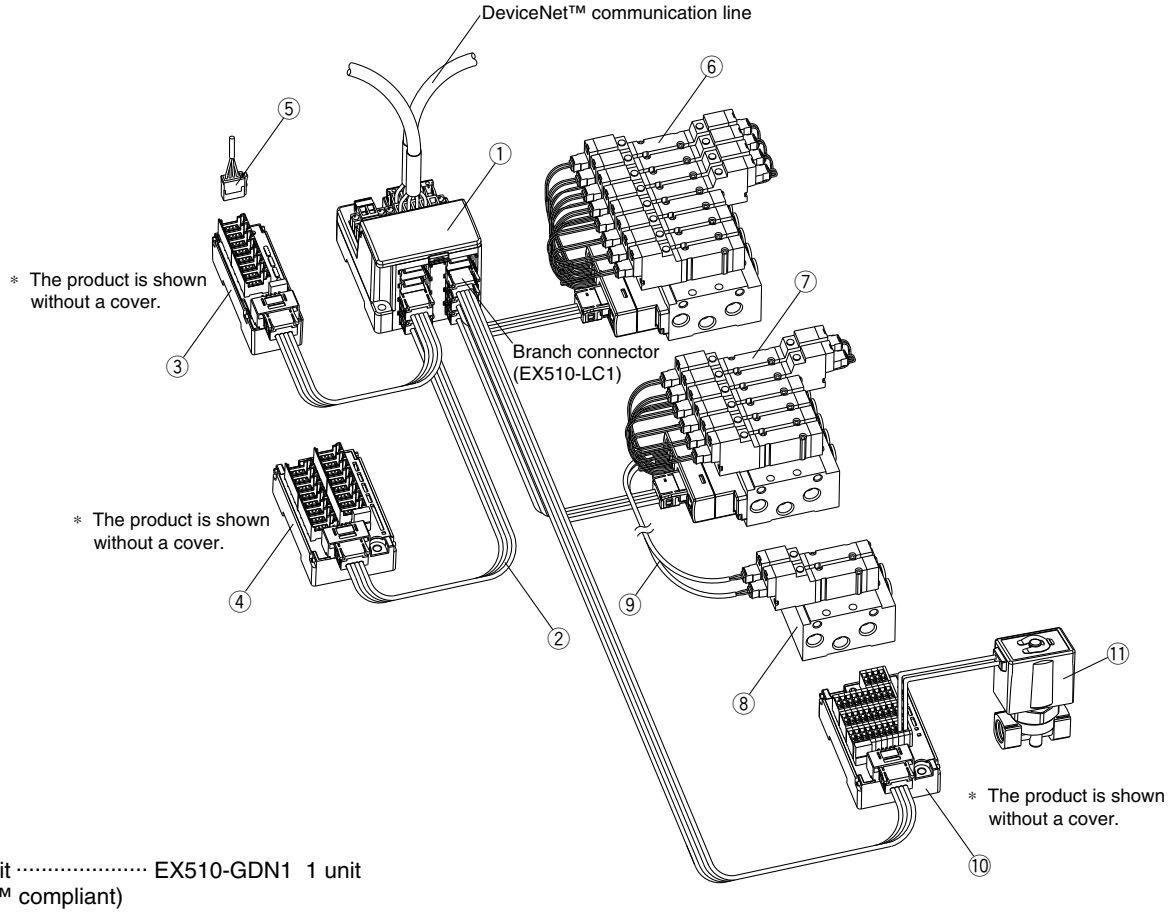

① Gateway unit ····· EX510-GDN1 1 unit
(DeviceNet™ compliant)

② Branch cable 20 meters ··· EX510-FC20 1 roll

∗1 ③ Input unit ····· EX510-DXN1 1 unit
(1 connector, 2-input type NPN input)

∗1 ④ Input unit····· EX510-DXN2 1 unit
(1 connector, 1 input type NPN input)

⑤ e-con ····· ZS-28-C□ 24 pcs.

∗1 ⑥ SY series manifold····· SS5Y3-42SA-08-C6 1 unit
∗ SY3140-5LOZ 4 units
∗ SY3240-5LOZ 4 units

∗1 ⑦ VQZ series manifold····· VV5QZ15-SA06C6 1 unit
∗ VQZ1150-5LO1 4 units
∗ VQZ1250-5LO1 2 units

⑧ SY series manifold ····· SS5Y3-42-02-C6 1 unit
∗ SY3140-5LOZ 2 units

⑨ Cable assembly ····· EX510-VW10S 1 pc.
for output entry

∗1 ⑩ Output unit····· EX510-DYN3 1 unit

⑪ 2-port solenoid valve ····· VX210AA 1 unit

∗1 **Two branch connectors are attached to the manifold with SI unit and two are attached to the input unit and the output unit respectively. The branch connector (EX510-LC1) is used to connect the individual units.**

Made to Order

Please contact SMC for detailed specifications and lead times.

① EtherNet/IP™ compatible

EX510-GEN1-X73

- 64 outputs (16 inputs x 4 branches)
- Without input function

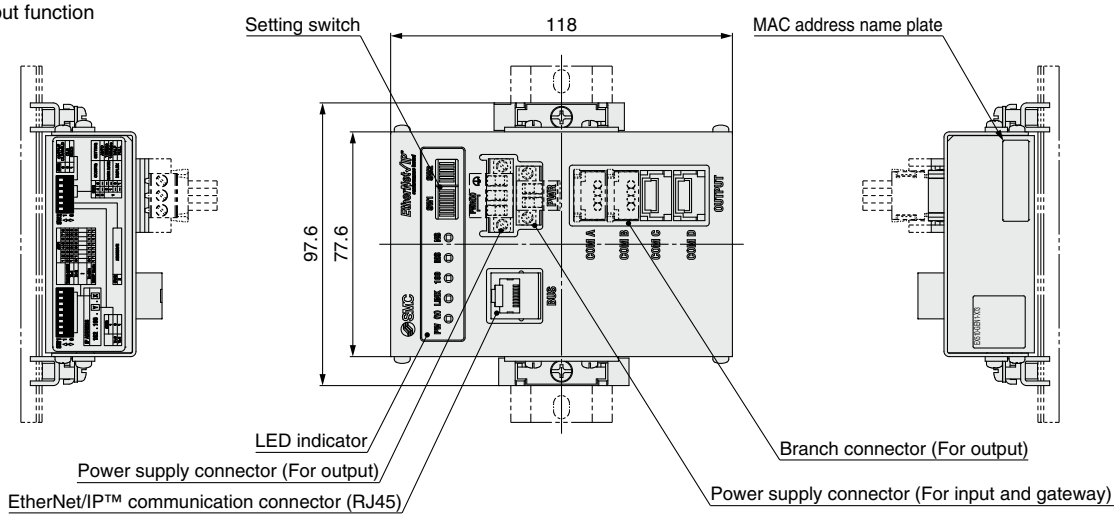

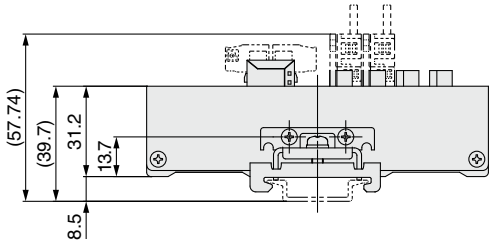

② PROFINET compatible

EX510-GPN1-X73

- 64 outputs (16 inputs x 4 branches)
- Without input function

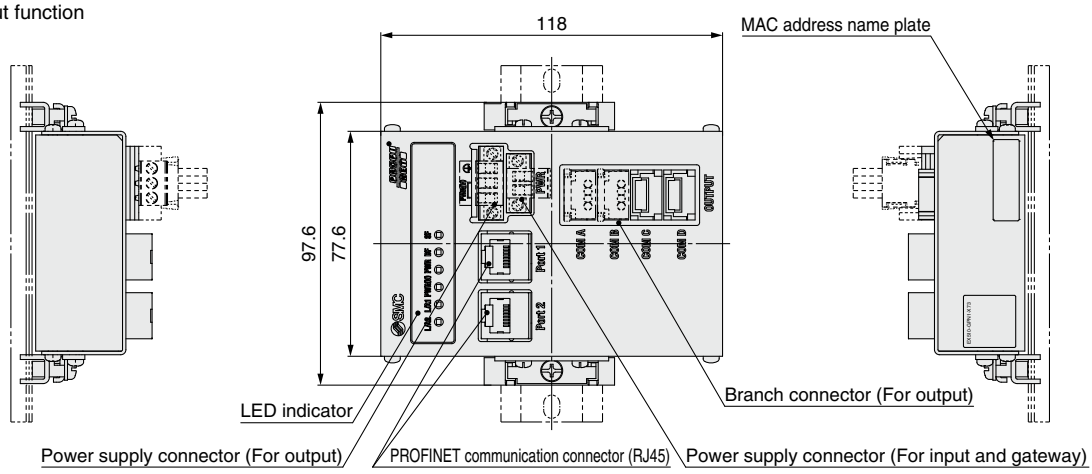

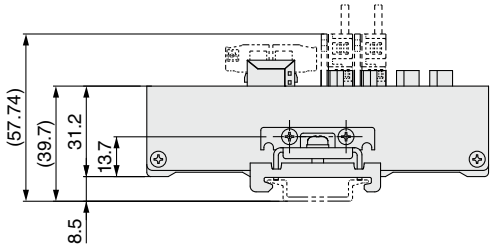

EX510 Series
Specific Product Precautions

Be sure to read this before handling the products. Refer to page 277 for safety instructions. For fieldbus system precautions, refer to pages 278 to 280 and the "Operation Manual" on the SMC website: http://www.smcworld.com

Operating Environment

⚠ Warning

1. Do not use this product in the presence of dust, particles, water, chemicals, and oil.

Use with such materials is likely to cause a malfunction or breakage.

Adjustment / Operation

⚠ Warning

1. Do not short-circuit a load.

If a load is short-circuited, excessive can cause damage to the connected devices. The fuse of the input unit will melt and below. The output and SI unit will activate its overcurrent protection function. However, they cannot cover all modes, so damage is likely to occur.

■ Trademark

DeviceNet™ is a trademark of ODVA.
EtherNet/IP™ is a trademark of ODVA.