Offset Pin Shift Cylinder

with high rigidity offset load capacity

ø32, ø40, ø50

■High rigidity, High precision

With plate extended:

Deflection of ±0.1 mm or less

(For ø50, 25 mm stroke, when allowable moment 29.4 N·m is applied)

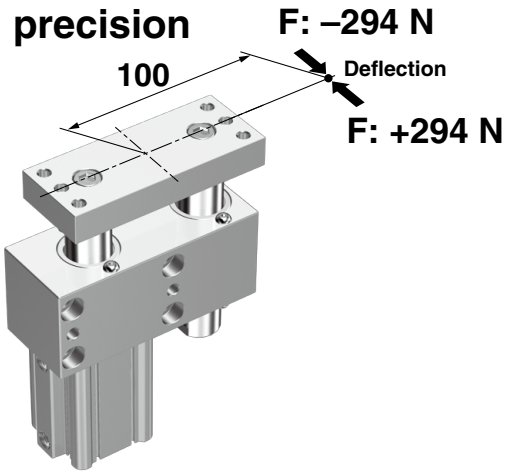

■3 different port location directions can be selected.

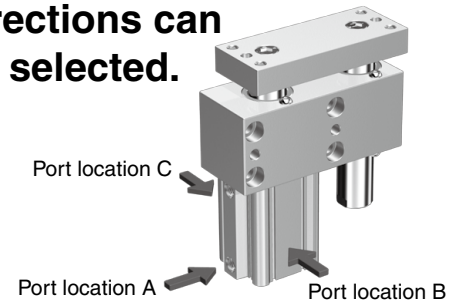

■Can be mounted from 2 directions

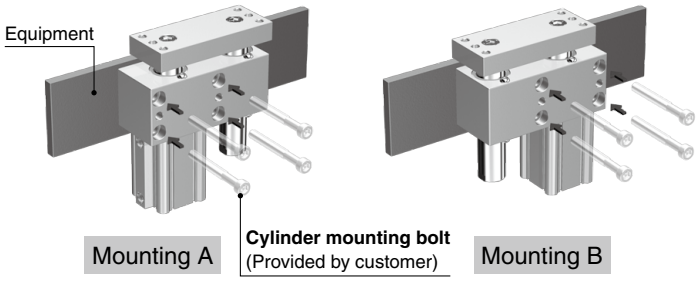

■Coil scrapers equipped as standard

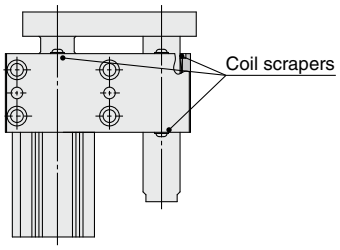

Application Example

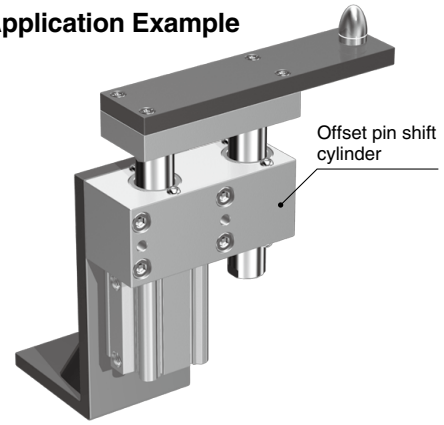

■Auto switches are mountable.

Applicable Auto Switches:

- Magnetic field-resistant solid state auto switch: D-P3DWA□, D-P4DW□
- Small auto switch: D-M9□, D-A9□

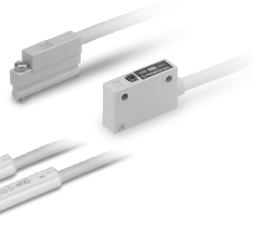

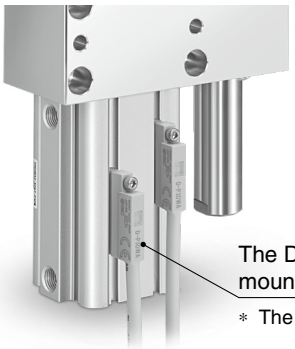

The D-P3DWA□, D-M9□, and D-A9□ are mountable on 3 surfaces.

∗ The D-P4DW□ is mountable on 2 surfaces.

CDQ2B-X2839

SMC

Offset Pin Shift Cylinder

CDQ2B-X2839

ø32, ø40, ø50

How to Order

C D Q2B 40 – 50 A Z – P3DWA ☐ – X2839

Built-in magnet for auto switch

Bore size

32	32 mm
40	40 mm
50	50 mm

Stroke [mm]

Bore size	Stroke
32	25, 50
40	25, 50, 75
50	25, 50, 75

Port location

A	B	C
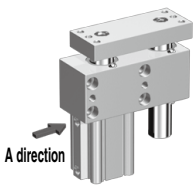	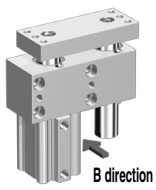	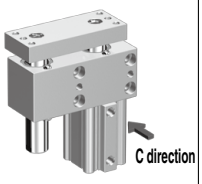

Number of auto switches

Nil	2
S	1

Auto switch

Nil	Without auto switch

Select applicable auto switch models from the table below.

Offset pin shift cylinder

Auto Switch Models: Refer to the Best Pneumatics Catalog for further information on auto switches.

Magnetic Field-resistant Auto Switches

Type	Auto switch model	Applicable magnetic field	Electrical entry	Indicator light	Wiring (Pin no. in use)	Load voltage	Lead wire length	Applicable load
Solid state auto switch	**D-P3DWASC**	AC magnetic field (Single-phase AC welding magnetic field)	Pre-wired connector	2-color indicator	2-wire (3–4)	24 VDC	0.3 m	Relay, PLC
	D-P3DWASE				2-wire (1–4)			
	D-P3DWA		Grommet		2-wire		0.5 m	
	D-P3DWAL						3 m	
	D-P3DWAZ						5 m	
	P4DWSC		Pre-wired connector		2-wire (3–4)		0.3 m	
	P4DWSE				2-wire (1–4)			
	P4DWL		Grommet		2-wire		3 m	
	P4DWZ						5 m	

Small Auto Switches ⚠ **Small auto switches cannot be used under a strong magnetic field.**

Type	Special function	Electrical entry	Indicator light	Wiring (Output)	Load voltage DC		Load voltage AC	Auto switch model Perpendicular	Auto switch model In-line	Lead wire length [m] 0.5 (Nil)	1 (M)	3 (L)	5 (Z)	Pre-wired connector	Applicable load	
Solid state auto switch	——	Grommet	Yes	3-wire (NPN)	24 V	5 V, 12 V	—	**M9NV**	**M9N**	●	●	●	○	○	IC circuit	Relay, PLC
				3-wire (PNP)				**M9PV**	**M9P**	●	●	●	○	○		
				2-wire		12 V		**M9BV**	**M9B**	●	●	●	○	○	—	
	Diagnostic indication (2-color indicator)			3-wire (NPN)		5 V, 12 V		**M9NWV**	**M9NW**	●	●	●	○	○	IC circuit	
				3-wire (PNP)				**M9PWV**	**M9PW**	●	●	●	○	○		
				2-wire		12 V		**M9BWV**	**M9BW**	●	●	●	○	○	—	
	Water resistant (2-color indicator)			3-wire (NPN)		5 V, 12 V		**M9NAV**	**M9NA**	○	○	●	○	○	IC circuit	
				3-wire (PNP)				**M9PAV**	**M9PA**	○	○	●	○	○		
				2-wire		12 V		**M9BAV**	**M9BA**	○	○	●	○	○	—	
Reed auto switch	——	Grommet	Yes	3-wire (NPN equivalent)	—	5 V	—	**A96V**	**A96**	●	—	●	—	—	IC circuit	—
				2-wire	24 V	12 V	100 V	**A93V**∗1	**A93**	●	●	●	●	—	—	Relay, PLC
			No			5 V, 12 V	100 V or less	**A90V**	**A90**	●	—	●	—	—	IC circuit	

∗1 The 1 m lead wire is only applicable to the D-A93.
∗ Solid state auto switches marked with "○" are produced upon receipt of order.
∗ Auto switches and mounting brackets are shipped together, but not assembled.

∗ Lead wire length symbols: 0.5 m·····Nil (Example) M9NWV
1 m····· M (Example) M9NWVM
3 m····· L (Example) M9NWVL
5 m····· Z (Example) M9NWVZ

Specifications

Bore size		32	40	50
Maximum operating pressure		1.0 MPa		
Proof pressure		1.5 MPa		
Minimum operating pressure		0.2 MPa		
Ambient temperature		−10 to 60°C (No freezing)		
Cushion		Head end: Rubber bumper, Rod end: None		
Allowable kinetic energy	**Extended**	0.15 J	0.26 J	0.46 J
	Retracted	0.29 J	0.52 J	0.91 J

Weight

[kg]

Bore size	Stroke [mm]		
	25	**50**	**75**
32	1.5	1.6	—
40	3.3	3.5	3.7
50	5.4	5.7	6.0

Deflection

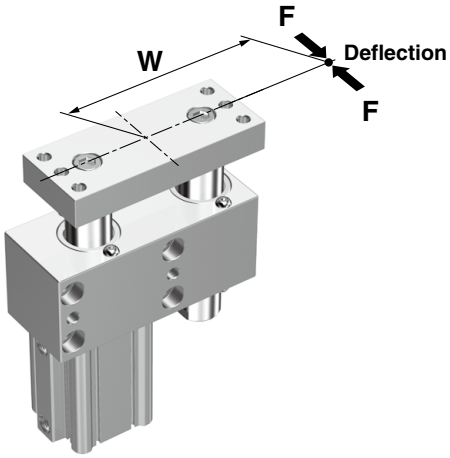

Bore Size: 32

[mm]

Stroke	Offset **W**	Lateral load **F** [N]	
		98	196
25	0	±0.1 or less	±0.1 or less
	50		
	100		
	150		±0.2 or less
50	0	±0.1 or less	±0.2 or less
	50		
	100		
	150	±0.2 or less	

Bore Size: 40

[mm]

Stroke	Offset **W**	Lateral load **F** [N]		
		98	196	294
25	0	±0.1 or less	±0.1 or less	±0.1 or less
	50			
	100			
	150		±0.2 or less	±0.2 or less
50	0	±0.1 or less	±0.1 or less	±0.2 or less
	50			
	100		±0.2 or less	
	150	±0.2 or less		
75	0	±0.1 or less	±0.2 or less	±0.2 or less
	50			
	100	±0.2 or less		—
	150		—	

Bore Size: 50

[mm]

Stroke	Offset **W**	Lateral load **F** [N]		
		98	196	294
25	0	±0.1 or less	±0.1 or less	±0.1 or less
	50			
	100			
	150			±0.2 or less
50	0	±0.1 or less	±0.1 or less	±0.1 or less
	50			
	100			±0.2 or less
	150	±0.2 or less	±0.2 or less	
75	0	±0.1 or less	±0.1 or less	±0.2 or less
	50			
	100	±0.2 or less	±0.2 or less	—
	150		—	

Dimensions

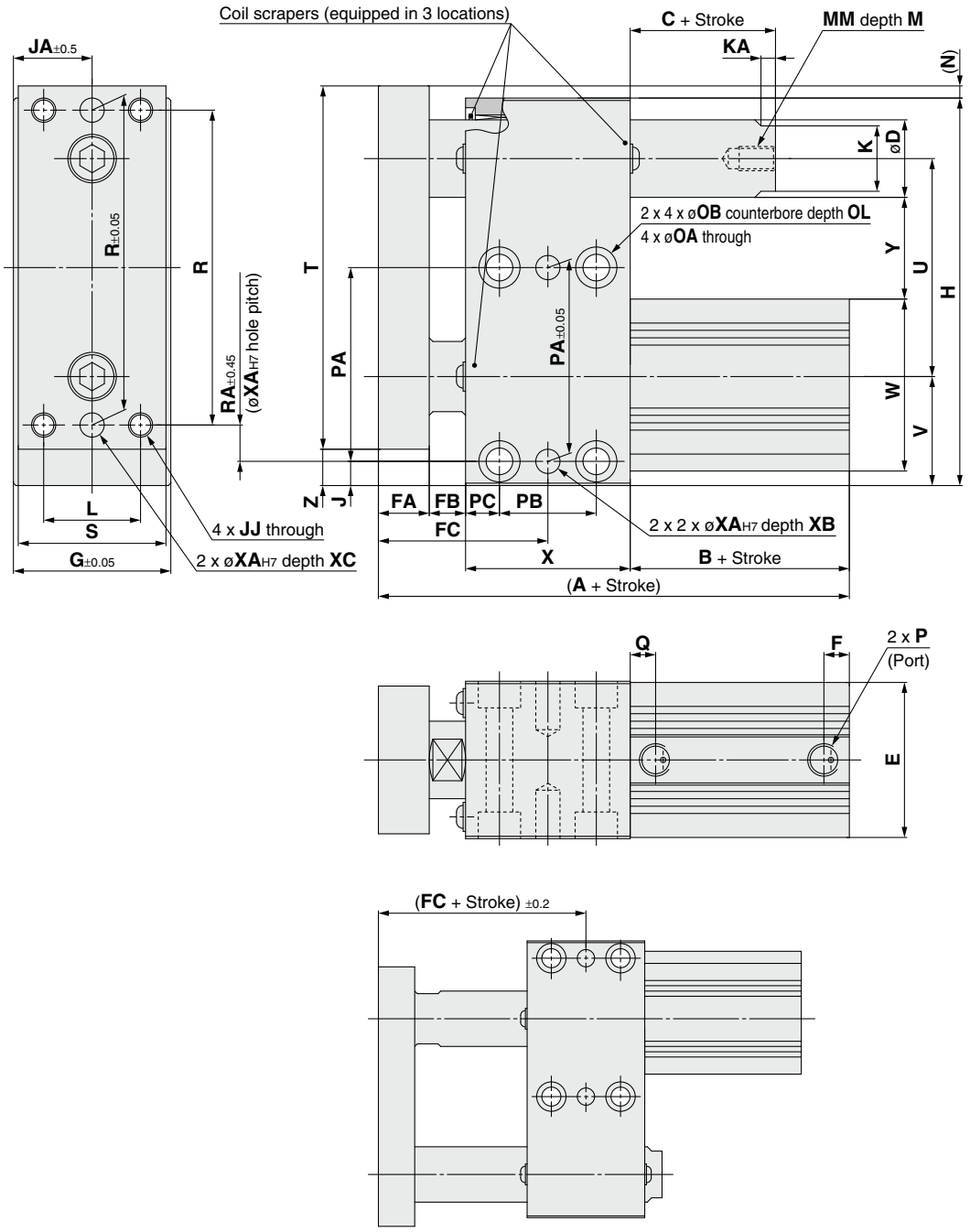

The above figure shows the condition when a stroke is extended.

[mm]

Bore size	Stroke	A	B	C	D	E	F	FA	FB	FC	G	H	J	JA	JJ	K	KA	L	M	MM	N
32	25, 50	102	33	10	20	45	7.5	13	8	45	46	109	7	23	M6 x 1.0	17	4.5	30	12	M8 x 1.25	5
40	25, 50, 75	128.5	39.5	10	25	52	7.5	18	11	60	53	137	8.5	26.5	M8 x 1.25	22	5	34	15	M10 x 1.5	5
50		144.5	40.5	10	32	64	10.5	21	15	70	65	160	10	32.5	M10 x 1.5	27	6	40	15	M10 x 1.5	5

Bore size	Stroke	OA	OB	OL	P	PA	PB	PC	Q	R	RA	S	T	U	V	W	X	XA	XB	XC	Y	Z
32	25, 50	6.4	11	16.5	Rc1/8	55	30	9	10	90	10	44	104	55	34.5	49.5	48	6	12	8	22.5	10
40	25, 50, 75	9	14	8.6	Rc1/8	70	40	11	12.5	110	15	51	127	75	41	57	60	8	15	10	36.5	15
50		11	17	11	Rc1/4	80	40	14	10.5	130	15	61	150	90	45	71	68	10	20	12	42	15

CDQ2B-X2839
Auto Switch Mounting

Auto Switch Proper Mounting Position (Detection at stroke end) and Mounting Height

D-P3DWA□

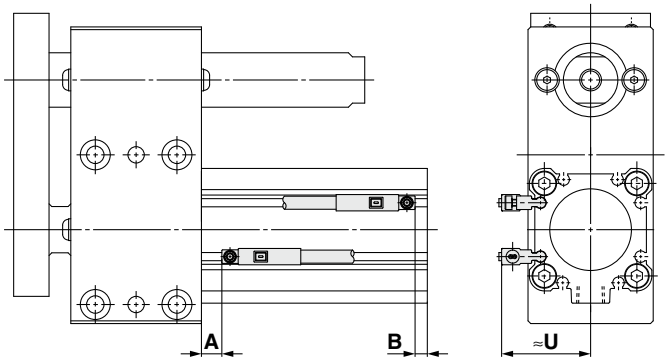

D-P4DW□

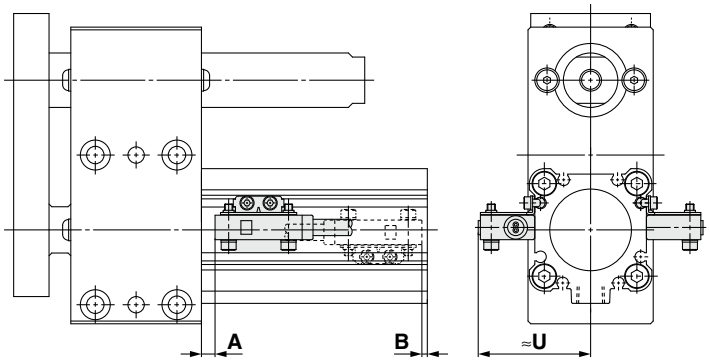

D-M9□(V)
D-M9□W(V)
D-M9□A(V)
D-A9□(V)

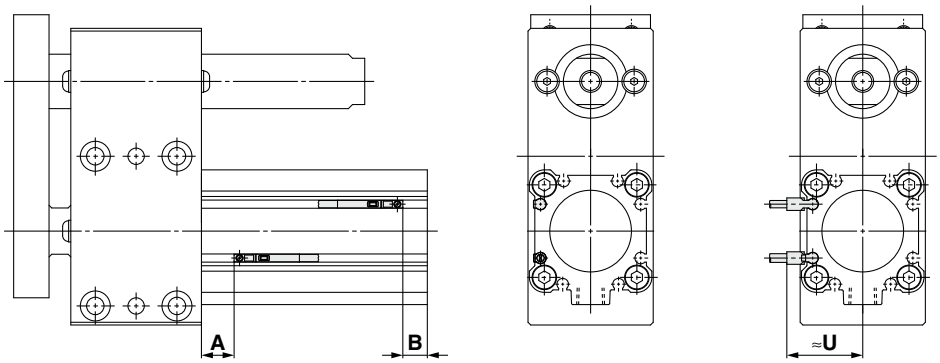

Auto Switch Proper Mounting Position

Auto switch model / Bore size	D-P3DWA		D-P4DW		D-M9□ D-M9□V D-M9□W D-M9□WV D-M9□A D-M9□AV		D-A9□ D-A9□V	
	A	B	A	B	A	B	A	B
32	7.5	4.5	5	2	12	9	8	5
40	11.5	7	9	4.5	16	11.5	12	7.5
50	9.5	10	9.5	10.5	14	14.5	10	10.5

Auto Switch Proper Mounting Height

Auto switch model / Bore size	D-P3DWA	D-P4DW	D-M9□V	D-A9□V
	U	U	U	U
32	35.5	41.5	30	27.5
40	38	45	32	30
50	43	50	37.5	35

Minimum Stroke for Auto Switch Mounting

Number of auto switches	D-P3DWA D-M9□□ D-A9□□	D-P4DW
1	25	25
2	25	75

Mounting

When installing the cylinders with auto switches, pay attention to the bending radius of the auto switch lead wire. For details, refer to the Operation Manual.

Auto Switch Mounting Bracket Part Nos./Mounting Method

Applicable auto switch	D-P3DWA□, D-M9□(V), D-M9□W(V), D-M9□A(V), D-A9□(V)
Bore size [mm]	ø32, ø40, ø50
Auto switch mounting bracket part no.	No mounting bracket required as the auto switch is directly mounted.
Auto switch tightening torque	0.2 to 0.3 N·m

Applicable auto switch	D-P4DW□	
Bore size [mm]	ø32, ø40	ø50
Auto switch mounting bracket part no.	BQ7-032	BQ7-050
Auto switch mounting bracket fitting parts lineup/weight	• Auto switch mounting bracket • Auto switch mounting nut • Hexagon socket head cap screw (M3 x 0.5 x 14 L, with spring washer) • Hexagon socket head cap screw (M2.5 x 0.45 x 5 L) • Spring washer (for M2.5) Weight = 8.5 g	• Auto switch mounting bracket • Auto switch mounting nut • Hexagon socket head cap screw (M3 x 0.5 x 14 L, with spring washer) • Hexagon socket head cap screw (M2.5 x 0.45 x 5 L) • Spring washer (for M2.5) Weight = 12 g
Mounting of auto switch	1. Fix the auto switch and the auto switch mounting bracket temporarily with the hexagon socket head cap screws (M3 x 14 L). 2. Insert the hexagon socket head cap screws (M2.5 x 5 L) into the spring washers (for M2.5), and tighten the auto switch mounting bracket and auto switch mounting nut temporarily. 3. Insert the temporarily fixed auto switch mounting nut into the mating groove of the cylinder tube. 4. Check the detecting position of the auto switch and fix the auto switch firmly with the hexagon socket head cap screws (M2.5 x 5 L, M3 x 14 L). ∗ The tightening torque for the hexagon socket head cap screw (M3 x 14 L) is 0.5 to 0.6 N·m. ∗ The tightening torque for the hexagon socket head cap screw (M2.5 x 5 L) is 0.25 to 0.35 N·m. 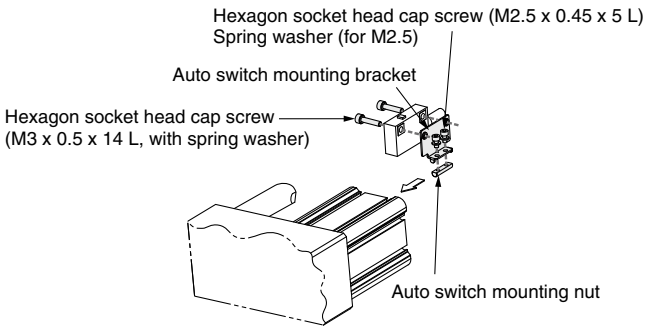 	

Specific Product Precautions

⚠ Caution

When mounting the product, be sure to prepare a bolt of the appropriate length and tighten it within the tightening torque range shown in the table below.

Tightening with excessive torque could result in a malfunction, whereas tightening with insufficient torque could result in misalignment or dropping.

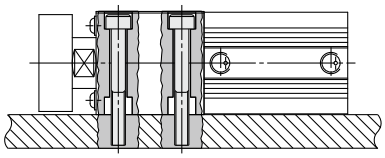

Bore size [mm]	Bolt	Range of tightening torque [N·m]
32	M6	4.2 to 5.2 N·m
40	M8	10.5 to 12.5 N·m
50	M10	19.6 to 24.5 N·m

⚠ **Safety Instructions**	Be sure to read the “Handling Precautions for SMC Products” (M-E03-3) and “Operation Manual” before use.